M3

Owner's Manual

BMW AG

M3 Sedan
M3 Coupe

BMW M GmbH
A subsidiary
of BMW AG
Munich

Congratulations, and thank you for choosing a BMW.

Thorough familiarity with your vehicle will provide you with enhanced control and security when you drive it. Therefore, we have this request:

Please take the time to read this Owner's Manual and familiarize yourself with the information that we have compiled for you before starting off in your new car. It contains important data and instructions intended to assist you in deriving maximum use and satisfaction from your BMW's unique range of technical features. The manual also contains information on care and maintenance designed to enhance operating safety and contribute to maintaining your BMW's value throughout an extended service life.

This Owner's Manual should be regarded as a permanent part of the vehicle. When the vehicle is sold, the manual should remain in the car to furnish the next owner with a source of important information on operation, safety and maintenance procedures.

This manual is supplemented by a Service and Warranty Information booklet (US models only). We recommend that you read this publication carefully.

Your BMW is covered by the following warranties:

- New Vehicle Limited Warranty
- Limited Rust Perforation Warranty
- Federal Emissions System Defect Warranty
- Federal Emissions Performance Warranty
- California Emission Control System Limited Warranty

Detailed information on these warranties is contained in the Service and Warranty Information booklet.

We wish you many miles of driving pleasure and satisfaction.

BMW M GmbH

Notes on the Owner's Manual

We have made every effort to ensure that you are able to find what you need in this Owner's Manual as quickly as possible. The fastest way to find certain topics is by using the detailed index at the end. If you require an initial overview of your vehicle, this can be found in the first chapter. The detailed table of contents immediately following the index is intended to arouse your curiosity about your BMW and stimulate you to read about it.

If at some time you wish to sell your BMW, remember to leave the Owner's Manual with the vehicle; consider it part of the vehicle.

Should you have any further questions, your BMW Retailer will be glad to assist at any time.

© 1997 BMW AG
Munich, Germany
Reprinting, including excerpts, only with the written consent of BMW AG, Munich.
Order number 01 41 9 790 397
German VIII/97
Printed in Germany
Printed on environment-friendly paper (recyclable and chlorine-free).

Symbols used

⚠ indicates notes you should definitely read – for the sake of your own safety and the safety of others, and to avoid damages to your BMW.◄

▷ indicates notes that alert you to specific features of your vehicle.◄

♻ special information on recycling.◄

◄ indicates the end of a block of information.

* indicates special equipment, country-specific equipment and optional extras.

📖 indicates that you should study the relevant section of this Owner's Manual in connection with a particular part.

The individual vehicle

In buying your BMW, you have decided in favor of a model with individualized equipment and fittings. This Owner's Manual describes all models and equipment that BMW offers within the same vehicle range.

We hope you will understand that this manual describes equipment and features which you might not have chosen for your vehicle. You can easily recognize any differences, as all optional accessories are marked with an asterisk*.

If your BMW features equipment which is not described in this Owner's Manual (e.g., car radio or telephone), (Supplementary) Owner's Manuals are enclosed. We ask you to read these manuals, too.

Status when going to press

BMW pursues a policy of continuous, ongoing development that is conceived to ensure that our vehicles continue to embody the highest quality standards combined with advanced, state-of-the-art technology. For this reason, it is possible that the features described in this Owner's Manual could differ from those on your vehicle. We are unable to completely eliminate the possibility that errors might have occurred. We therefore ask you to accept that no claims of a legal nature involving the specifications, illustrations and descriptions can be considered.

For your own safety

Use unleaded gasoline only. Fuels containing up to 10% ethanol or other oxygenates with up to 2.8% oxygen by weight (i.e. 15% MTBE or 3% methanol plus an equivalent amount of co-solvent) will not void the applicable warranties with respect to defects in materials or workmanship.

Field experience has indicated significant differences in fuel quality (i.e., volatility, composition, additives, etc.) among gasolines offered for sale in the United States and Canada. The use of poor-quality fuels may result in driving, starting and stalling problems especially under certain environmental conditions, such as high ambient temperature and high altitude.

Should you encounter problems while driving that you suspect could be related to the fuel you are using, we recommend that you respond by switching to a recognized high-quality brand.

Failure to comply with these recommendations may result in unscheduled maintenance. Follow the relevant safety rules when you are handling gasoline.◀

Important safety information!

For your own safety, use genuine parts and accessories approved by BMW.

When you purchase accessories tested and approved by BMW and Original BMW Parts, you simultaneously acquire the assurance that they have been thoroughly tested by BMW to ensure optimum performance when installed on your vehicle.

BMW warrants these parts to be free from defects in material and workmanship.

BMW will not accept any liability for damage resulting from installation of parts and accessories not approved by BMW.

BMW cannot test every product from other manufacturers to verify if it can be used on a BMW safely and without risk to either the vehicle, its operation, or its occupants.

Original BMW Parts, BMW Accessories and other products approved by BMW, together with professional advice on using these items, are available from all BMW Retailers.

Installation and operation of non-BMW approved accessories such as alarms, radios, amplifiers, radar detectors, wheels, suspension components, brake dust shields, telephones (including operation of any portable cellular phone from within the vehicle without using an externally mounted antenna) or transceiver equipment (e.g., C.B., walkie-talkie, ham radio or similar) may cause extensive damage to the vehicle, compromise its safety, interfere with the vehicle's electrical system or affect the validity of the BMW Limited Warranty. See your authorized BMW Retailer for additional information.

Do not use key or remote control to lock doors or luggage compartment with anyone inside the car.

"Maintenance, replacement or repair of the emission control devices and systems may be performed by any automotive repair establishment or individual using any certified automotive part."◀

The following only applies to vehicles owned and operated in the US.

REPORTING SAFETY DEFECTS

If you believe that your vehicle has a defect which could cause a crash or could cause injury or death, you should immediately inform the National Highway Traffic Safety Administration (NHTSA) in addition to notifying BMW of North America, Inc., P.O. Box 1227, Westwood, New Jersey 07675-1227, Telephone (201) 307-4000.

If NHTSA receives similar complaints, it may open an investigation, and if it finds that a safety defect exists in a group of vehicles, it may order a recall and remedy campaign. However, NHTSA cannot become involved in individual problems between you, your dealer, or BMW of North America, Inc.

To contact NHTSA, you may either call the Auto Safety Hotline toll-free at 1-800-424-9393 (or 202-366-0123 in Washington, D.C. area) or write to: NHTSA, U.S. Department of Transportation, Washington, DC 20590. You can also obtain other information about motor vehicle safety from the Hotline.

At a glance

Controls and features

Care and maintenance

Owner service procedure

Advanced technology

Technical data

Index

Contents

At a glance

Cockpit 14
Instrument cluster 16
Indicator and warning lamps 18
Hazard warning system 20
Hazard warning triangle 20
First-aid kit 20
Refueling 21
Fuel specifications 21
CARB OBD II interface 21
Tire inflation pressures 22

Controls and features

Locks and security systems:
Keys 26
Electronic immobilizing device 26
Doors 27
Luggage compartment lid 29
Luggage compartment 30
Power windows 31
Sliding/tilt sunroof 32

Adjustments:
Seats 33
Steering wheel 35
Mirrors 36

Passenger safety systems:
Safety belts 37
Child restraint system 38
Installing child seats 39
Airbags 40
Child-safety locks 42

Driving:
Steering/ignition lock 42
Starting the engine 43
Switching off the engine 44
Parking brake 44
Manual transmission 45
Automatic transmission 46
Turn signals/high beam 48
Wiper/washer system 49
Cruise control 50

Everything under control:
Odometer 51
Tachometer 51
Energy control 51
Fuel gauge 52
Coolant temperature gauge 52
Service Interval Display 52
Multi-Information Display (MID) 53
Check Control 55
Check Control with outside temperature display and digital clock 58
Onboard computer 61

Technology for driving comfort and safety:
ASC+T 68

Contents

Controls and features

Lamps:
Parking lamps/low beams 69
Instrument cluster lighting 69
Foglamps 70
Interior lamps 70
Reading lamps 70

An inviting climate:
Heated seats 71
Parked-car ventilation system 71
Automatic climate control 72

Cabin convenience:
BMW Hi-Fi System 77
Glove compartment 77
Ashtray 78
Coin box, cup holder 78
Cigarette lighter 78
Center arm rest, rear 79
Through-loading system 79
Ski bag 79
Cargo loading 81

Care and maintenance

Special operating instructions:
Break-in procedures 84
Driving notes 84
Catalytic converter 86
Antilock Brake System (ABS) 87
Disc brakes 88
Multi-disc self-locking differential 89
Brake system 89
Winter driving 90
Roof-mounted luggage rack 91
Radio reception 92
Mobile phones 92
Technical modifications to the vehicle 93

Wheels and tires:
Tire inflation pressures 94
Tire tread 94
Tire replacement 95
Interaxle tire changes 95
The right choice 96
Winter tires 97
Approved wheels and tires 98

Under the hood:
Hood 99
Engine compartment 100
Washer fluids 102
Engine oil 102
Coolant 105
Brake fluid 106
Power steering fluid 106
Vehicle Identification Number 107

Care and maintenance:
The BMW Maintenance System 108
Caring for your car 109
Vehicle storage 115

Recycling:
Recycling 116

Contents

Owner service procedure

Replacement procedures:
Onboard tool kit 118
Windshield wiper blades 118
Lamp bulbs 119
Master key with battery lamp 123
Changing tires 124
Battery 127
Fuses 129

In case of electrical malfunction:
Fuel filler door 130
Sliding/tilt sunroof 130

Assistance, giving and receiving:
Jump-starting 131
Towing the vehicle 132
Towing 132

Advanced technology

Airbags 134
ASC+T 134
Radio reception 135
Safety belt tensioner 135

Technical data

Engine specifications 138
Dimensions and weights 139
Capacities 140
Electrical system 141
Drive belts 141

Index

Everything from A to Z 144
Owner service procedures
from A to Z 149

At a glance

Cockpit 14
Instrument cluster 16
Indicator and warning lamps 18
Hazard warning system 20
Hazard warning triangle 20
First-aid kit 20
Refueling 21
Fuel specifications 21
CARB OBD II interface 21
Tire inflation pressures 22

Cockpit

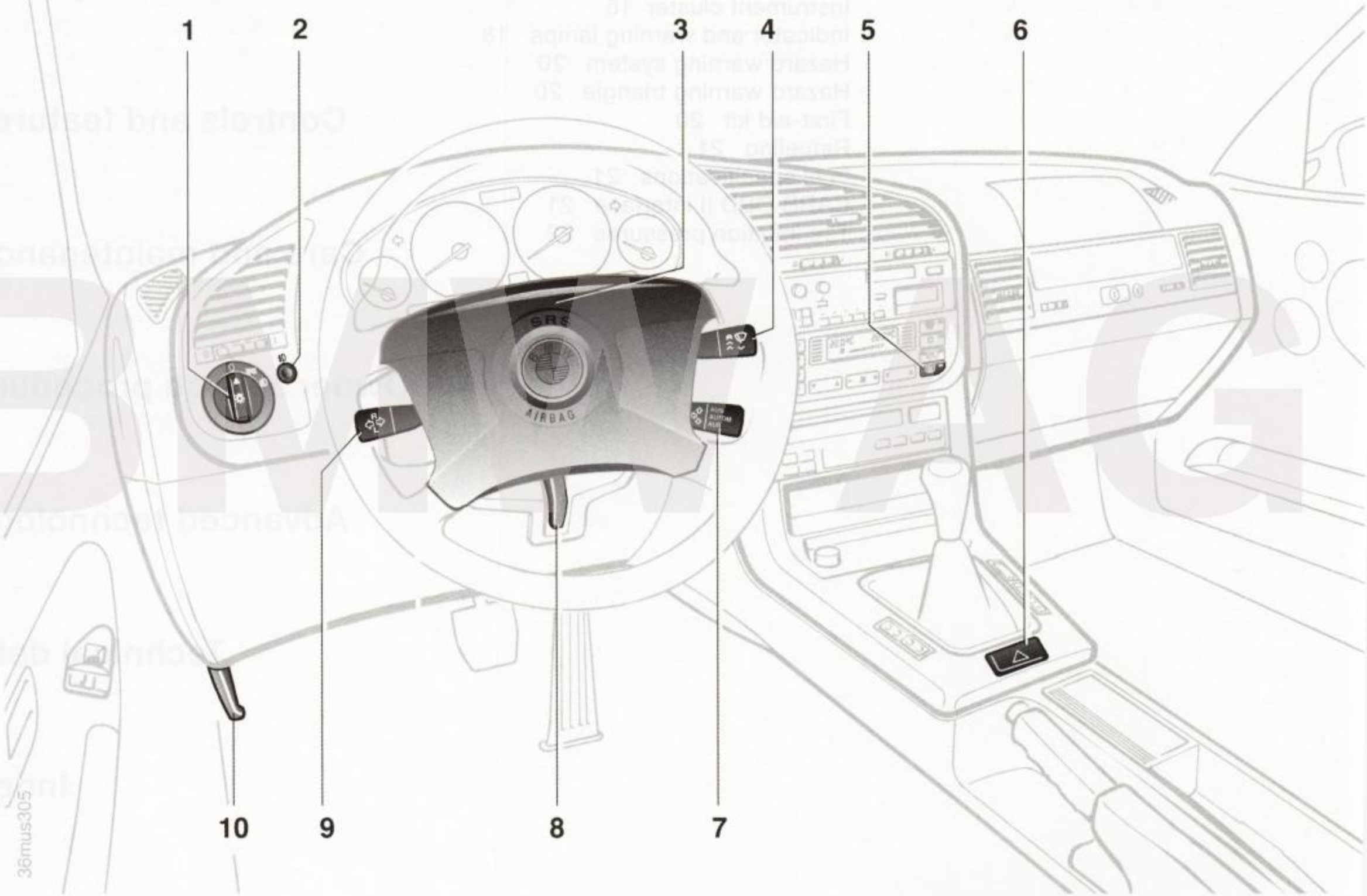

Cockpit

1 Lamp switch 69
2 Foglamps 70
3 Horn, entire surface
4 Wiper/washer lever 49
5 Rear window defroster 75
6 Hazard warning system 20
7 Automatic cruise control* 50
8 Adjust steering wheel* 35
9 Turn signals, high beam headlamps and headlamp flasher 48
10 Engine hood unlocking device 99

Instrument cluster

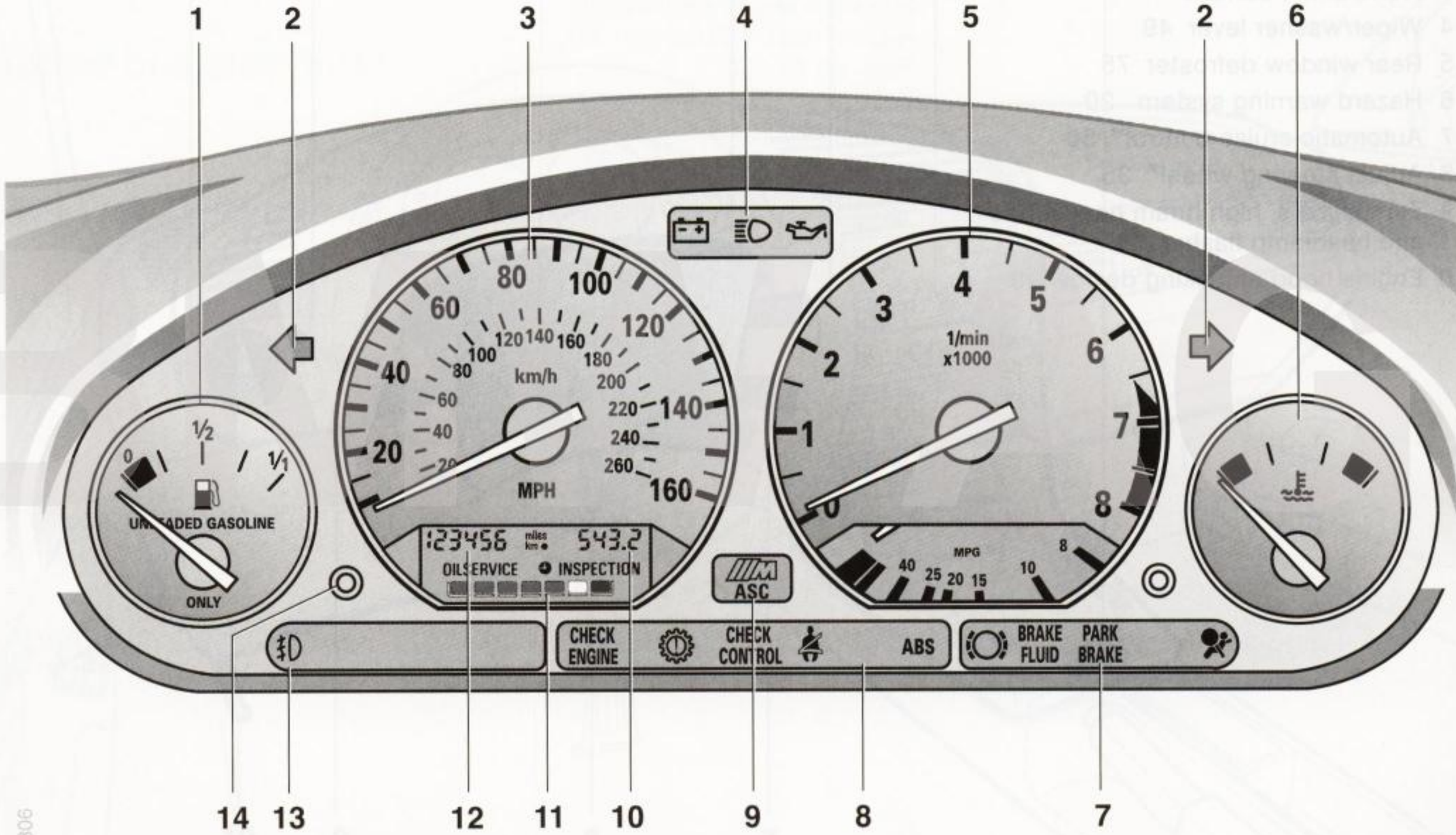

36mus306

Instrument cluster

1 Fuel gauge with low-fuel warning lamp 52
2 Indicator lamp for turn signals 18
3 Speedometer
4 Indicator and warning lamps for
- ▷ Battery charge current 18
- ▷ High beam headlamps 18
- ▷ Engine oil pressure 18

5 Tachometer 51
Energy control 51
6 Coolant temperature gauge 52
7 Indicator and warning lamps for
- ▷ Brake pad wear 18
- ▷ Brake system hydraulics 19
- ▷ Parking brake 19
- ▷ Airbag 40

8 Indicator and warning lamps for
- ▷ Emissions-related systems indicator 19
- ▷ Automatic transmission* 18
- ▷ Warning lamp for Check Control 55
- ▷ Wear your safety belt 19
- ▷ ABS 18

9 ASC+T indicator lamp 18
10 Trip odometer 51
11 Service Interval Display 52
12 Odometer 51
13 Indicator lamps for foglamps 18
14 Trip odometer reset button 51

Indicator and warning lamps

Turn signal left/right, green

Flashes when the turn signals are in operation.

Battery charge current, red

Goes out after the engine has started.
If the lamp comes on during normal vehicle operation: the battery is no longer being charged. Indicates a defect in the generator drive belt or the charging circuit.

If the V-belt is defective, do not run the coolant pump; overheating and potential engine damage would result. Contact a BMW Retailer.◀

High beam, blue

Lights up when the high beams are switched on or the headlamp flashers are activated.

Engine oil pressure, red

Goes out after the engine has started. May come on briefly at idle when the engine is hot, but must go out again at higher engine speed.

If the lamp comes on during normal vehicle operation: stop vehicle and switch off engine immediately. Check engine oil level; if necessary, add oil. If oil level is correct: contact a BMW Retailer.

Foglamps, green

Lights up whenever you switch on the foglamps.

Airbags, red

This lamp turns on for an operation check when you turn the ignition key to position 1. If, at the operation check, it does not go on, or goes on while driving, have it checked at your BMW Retailer. Additional notes: Page 40

Automatic transmission*, yellow

Goes out after the engine has started.
Additional notes: Page 47

ASC+T (Automatic Stability Control plus Traction), yellow

Goes out shortly after the ignition is switched on: System OK.
Additional notes: Page 68

ABS (Antilock Brake System), yellow

Goes out after the engine has started. If the lamp comes on during normal vehicle operation: ABS has been deactivated in response to a system malfunction. Conventional braking force remains unimpaired.
Additional notes: Page 87

Brake pad wear, yellow

Lights up when starter is actuated and goes out when the engine is started.
If the lamp comes on during normal vehicle operation: replace brake pads immediately.

Use only original BMW-approved brake pads, as otherwise the vehicle authorization is no longer valid.◀

Indicator and warning lamps

Brake hydraulics, red

Goes out after the engine has started.
If the lamp comes on during normal vehicle operation: low brake fluid. Additional notes: Page 106

Parking brake, red

Goes out after the engine has started. Comes on when you engage the parking brake.
Additional notes: Page 44

Emissions-related systems

Lamp goes out once engine starts.
If this indicator lamp lights up during normal vehicle operation, either continuously or intermittently, this indicates a fault in one of the emissions-related electronic circuits. Although the vehicle remains operational, you should have the systems checked by a BMW Retailer at the earliest possible opportunity.

Please fasten your safety belt, red

(With acoustic signal*). Lights up briefly when the ignition key is turned, and then goes out (in some models it goes out after you fasten safety belts).

Hazard warning system

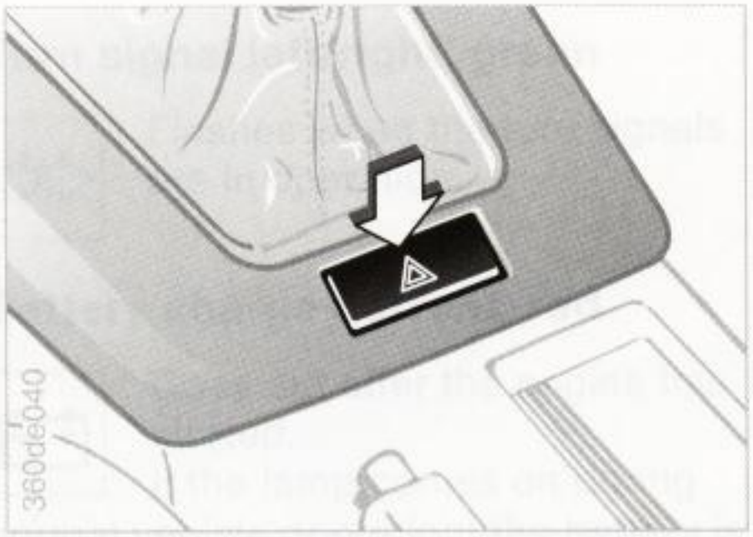

The button flashes intermittently when the hazard warning lamps are on.

The button is also illuminated whenever the vehicle lighting is switched on.

Hazard warning triangle*

The warning triangle can be stored in the luggage compartment in a storage shelf at the right for convenient access.

Comply with legal requirements concerning the need to carry a warning triangle in the car.◀

First aid kit*

On the right in the luggage compartment, on a shelf.

Some of the items in the first-aid kit are suitable for use for a limited period only. Therefore you should regularly check the contents and replace defective articles. These are available in any pharmacy.
Comply with legal requirements concerning the need to carry a first-aid kit in the car.◀

Refueling

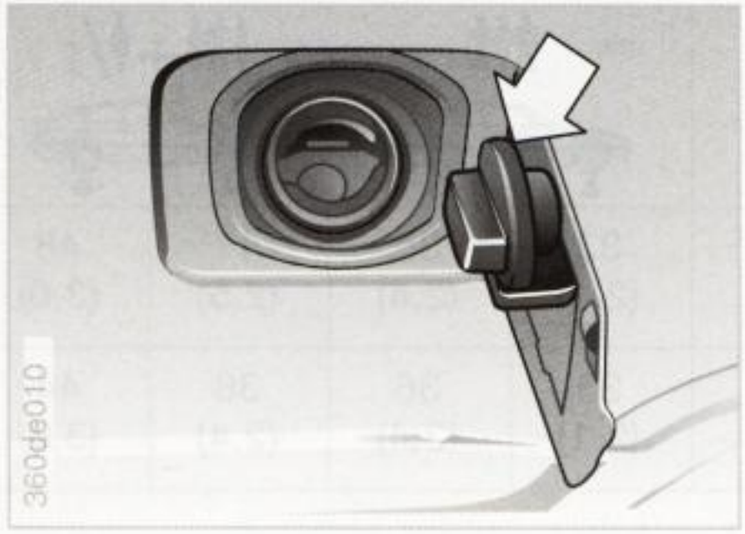

To unlock the filler door in the event of a central locking system failure, refer to page 130.

⚠ When handling fuel, comply with the safety regulations displayed by gas stations.◀

Fuel specifications

Because the engine-management systems used in these cars incorporate predetonation-detection devices (knock sensors), you have the option of using fuels of different specifications.

Minimum requirement: unleaded regular gasoline (87 AKI).

Higher-octane fuels (premium unleaded, 90 AKI; super premium, 92 AKI) will provide slightly higher levels of fuel economy and performance.

⚠ Never use leaded fuel, as it would cause permanent damage to both the catalytic converter and the engine-management system's oxygen sensors.◀

AKI = Anti Knock Index

CARB OBD II interface

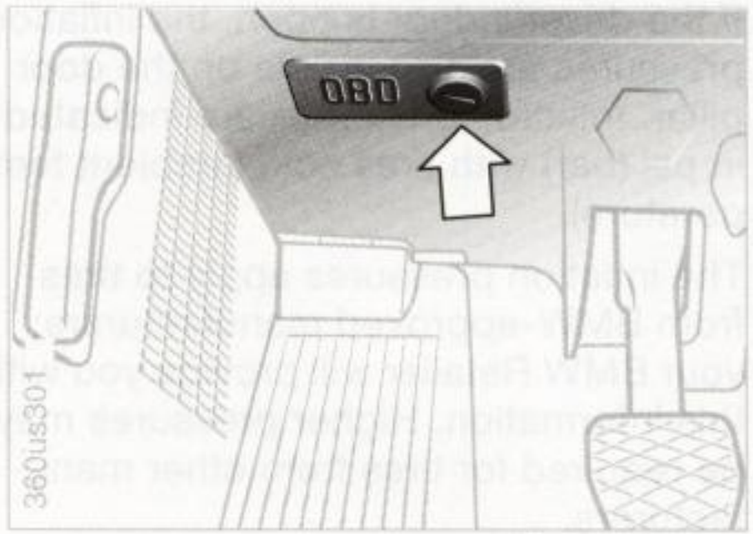

The OBD II interface (data link connector) is located beneath a cover panel (with the letters "OBD") near the foot support in the driver's side footwell (arrow).

Tire inflation pressures

If the driver's door is open, the inflation pressures are also visible on the door pillar. Inflation pressures are indicated in psi (bar) with tires cold (ambient temperature).

The inflation pressures apply to tires from BMW-approved manufacturers; your BMW Retailer will provide you with this information. Higher pressures may be required for tires from other manufacturers.

M3 Sedan, Coupe Tire sizes Inflation pressures are indicated in psi (bar)	max.			
225/45 ZR 17 (front) 245/40 ZR 17 (rear)	33 (2.1)	35 (2.4)	41 (2.5)	48 (3.0)
225/45 R 17 87 H M+S	33 (2.1)	36 (2.4)	36 (2.4)	44 (3.0)

Periodically check the inflation pressure – also of the spare tire – at least twice each month and before setting out on an extended trip. Failing this, incorrect tire pressure may render the car unstable or cause tire damage resulting in an accident.◀

BMW AG

Locks and security systems:
Keys 26
Electronic vehicle immobilizer 26
Doors 27
Luggage compartment lid 29
Luggage compartment 30
Power windows 31
Sliding/tilt sunroof 32

Adjustments:
Seats 33
Steering wheel 35
Mirrors 36

Passenger safety systems:
Safety belts 37
Child restraint system 38
Installing child seats 39
Airbags 40
Child-safety locks 42

Driving:
Steering/ignition lock 42
Starting the engine 43
Switching off the engine 44
Parking brake 44
Manual transmission 45
Automatic transmission 46
Turn signals/high beam 48
Wiper/washer system 49
Cruise Control 50

Everything under control:
Odometer 51
Tachometer 51
Energy Control 51
Fuel gauge 52
Coolant temperature gauge 52
Service Interval Display 52
Multi-Information Display (MID) 53
Check Control 55
Check Control with outside temperature display and digital clock 58
Onboard computer 61

Technology for driving comfort and safety:
ASC+T 68

Lamps:
Headlamp switch 69
Instrument panel lighting 69
Foglamps 70
Interior lamps 70
Reading lamps 70

An inviting climate:
Heated seats 71
Parked-car ventilation system 71
Automatic climate control 72

Cabin convenience:
BMW Hi-Fi System 77
Glove compartment 77
Ashtray 78
Coin box, cup holder 78
Cigarette lighter 78
Center arm rest, rear 79
Through-loading system 79
Ski bag 79
Cargo loading 81

Keys

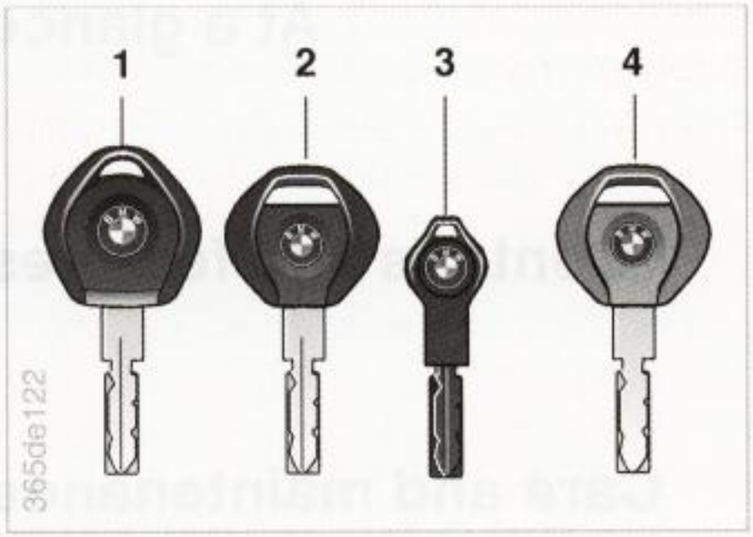

1 Master key with battery-powered lamp (switch on by pressing the BMW symbol).

2 Master key without lamp.

3 Spare key to be kept in a safe place, e.g. in your wallet. This key is not intended for continuous use.

4 Door and ignition key
This key does not operate the locks for the glove compartment and the luggage compartment lid. This is useful e.g. at a hotel.

Electronic vehicle immobilizer

The electronic vehicle immobilization unit increases the anti-theft protection of your BMW – without additional adjustment or activation of systems. This electronic immobilization system is designed to reduce the susceptibility of the vehicle to theft by making it impossible to start the engine using any means other than the special keys furnished with the vehicle.

The system features an electronic chip integrated within the key as a supplement to the conventional mechanical locking system.

The lock mechanism itself is actually a dual-function device, simultaneously serving as a communications interface designed to allow the car security system to maintain a continuous stream of variable, vehicle-specific signals with the electronic circuitry in the key. The ignition, the flow of fuel and the starter are enabled only after the key has been recognized as "authorized".

▷ External force can damage the electronic circuitry integrated in the key. Such a key can no longer be used to start the engine.◀

Replacement of a key

Replacement keys are available exclusively through your authorized BMW Retailer, who is also under obligation to request verification of vehicle ownership before issuing a substitute key.

Your BMW Retailer can also cancel or restore the electronic system authorization for individual keys (e.g., if a key is lost). A deactivated key can no longer be used to start the engine.

For US owners only

The transmitter and receiver units comply with Part 15 of the FCC (Federal Communication Commission) Regulations. Operation is governed by the following:

FCC ID: LXBEWS

As defined in the regulations, such a device is not to emit significant interference and must also be shielded against interference from external sources to prevent unauthorized or inadvertent activation.

⚠ Any unauthorized modifications or changes to these devices could void the user's authority to operate this equipment.◀

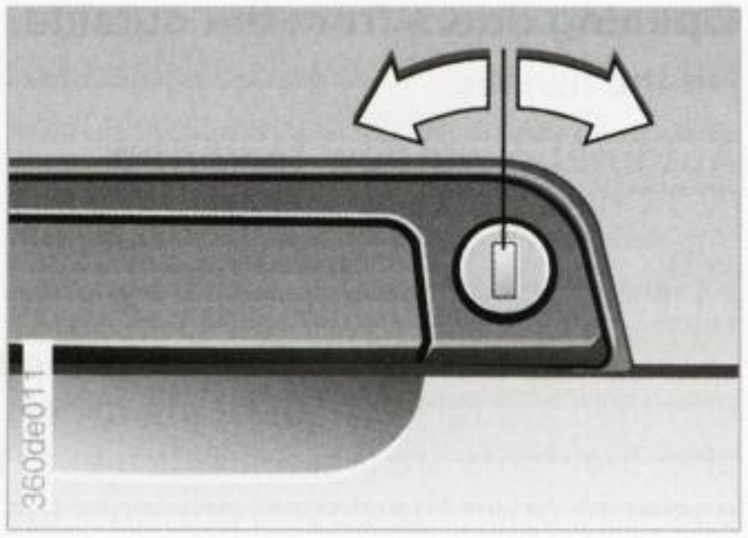

Operating central locking system from outside the vehicle

When the front doors are closed, the activation of a door lock or of the luggage compartment lock with a key unlocks or locks the following:

- Doors
- Luggage compartment lid
- Fuel filler door

The double-lock system is engaged at the same time. Both the door locks and release handles remain locked.

⚠ Never use the keys or the remote control* to lock an occupied vehicle, as it would then be impossible to unlock it from inside.◀

Convenient closure* for power windows and sliding/tilt sunroof: after closing the doors, hold the key in the lock position to close the windows and sliding/tilt sunroof. The windows/sunroof stop moving immediately when you release the key.

Emergency lock operation

(in the event of electrical failure)

Turn the key to the end positions of the door lock to unlock/lock the respective door.

Activating the central locking system from inside the vehicle

Pressing the lock button of a front door unlocks/locks the doors and luggage compartment, but does not arm the alarm system.

▷ If the vehicle is locked from the inside with this lock button, the fuel filler door remains unlocked to allow refueling.
It is also possible to unlock the car from the inside by pulling on one of the front door handles.◀

To preclude accidental locking of the vehicle

- it can not be locked with the lock button when the driver's door is open
- the safety button of the passenger door activates the central locking system only when both front doors are locked.

Children can lock the doors from inside. Therefore, you should always remove the key and take it with you to ensure that you can unlock the car from the outside at all times.◀

In an accident, the central locking system automatically unlocks the doors and the interior lamps switch on. Depending on the version, the hazard warning flashers are also activated.

Avoid using the inside lock buttons to lock the rear doors while driving, as these doors would then fail to unlock automatically in the event of an accident.◀

Opening doors from the inside

Pull interior door handle of a front door twice in succession (the initial pull unlocks the door, the second opens it).

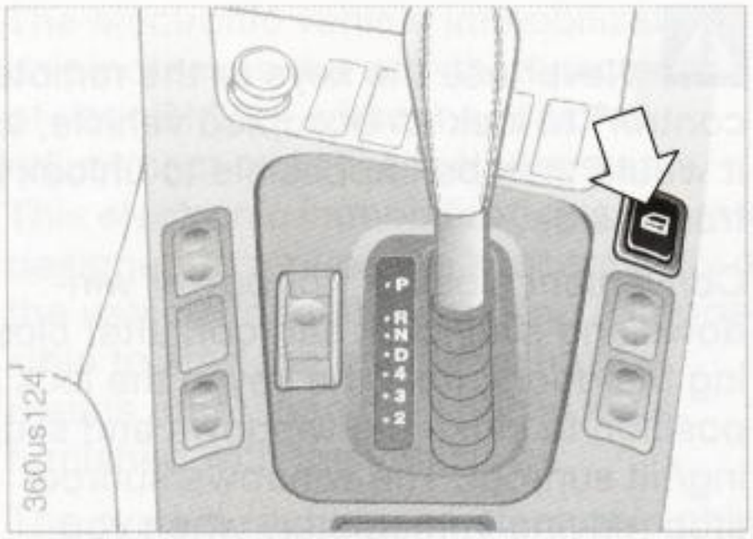

Central locking system button

This button operates the central locking system when the driver's door is closed. It unlocks the doors and luggage compartment, but does not arm the alarm system.

The fuel filler door remains unlocked to allow refueling.

The picture shows, as an example, the switch arrangement for the M3 Sedan.

Opening doors from the outside

Lift the handle.

Automatic window lowering

(M3 Coupe)

The door windows are lowered somewhat when the doors are opened and then are raised again immediately after the doors are locked. This makes it easier to open the doors, prevents the rubber door seals from being damaged and ensures proper seating of the windows in the rubber door seals after closing.◀

Driver's door lock heating*

Lift the handle of the driver's door for approx. 3 seconds: the heating switches on. The switch-on time is automatically controlled to save power.

Luggage compartment lid

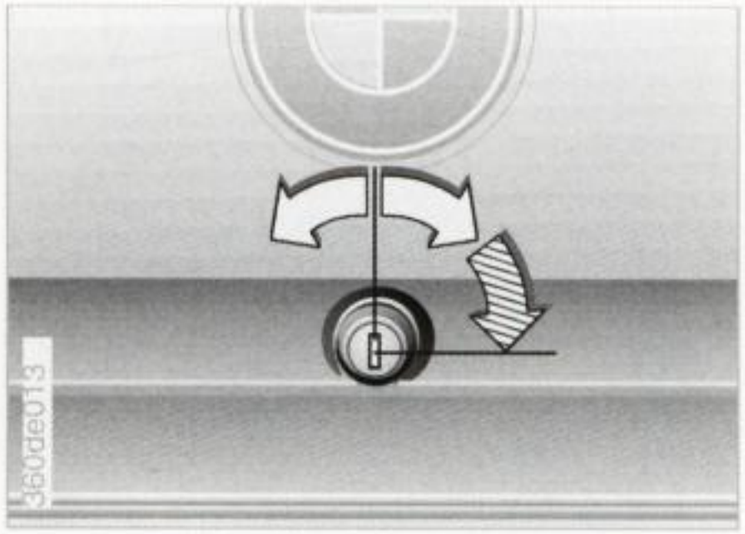

The lock actuation is only possible with a master key.

Central locking system

To engage locks

Turn to the right: the luggage compartment lid and - if the front doors are closed - the doors are locked and the alarm system is armed.

To lock the luggage compartment separately

Turn the master key to the right until the slot is horizontal, then extract the key from the lock.

The luggage compartment lid is locked and disconnected from the central locking system. The luggage compartment lid then remains locked when the central locking system is unlocked with a door lock or the lock knobs.

Access to the luggage compartment is thus prevented when leaving the door and ignition key with others (refer to page 26); this is useful e.g., at a hotel.

To unlock car

Turn to the left: the luggage compartment lid and the doors are unlocked.

Emergency lock operation

(in the event of electrical failure)

Turn the master key to the left as far as possible: the luggage compartment lid is unlocked.

After closing, the luggage compartment lid must be locked again separately.

The luggage compartment lamp

is on when the luggage compartment lid is open.

Luggage compartment lid

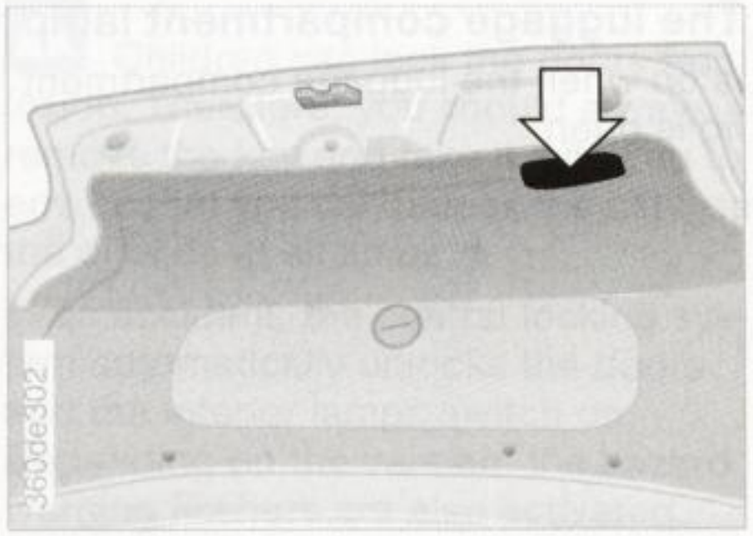

To close

The handle recess (arrow) makes it easier to pull down the luggage compartment lid.

Do not drive with the luggage compartment lid open, as exhaust fumes could be drawn into the interior of the vehicle. Should it be absolutely necessary to operate the vehicle with the luggage compartment lid open:

- Raise all windows and shut the sliding/tilt sunroof
- Increase sharply the air volume of the automatic air conditioning*, refer to page 76.◀

Luggage compartment

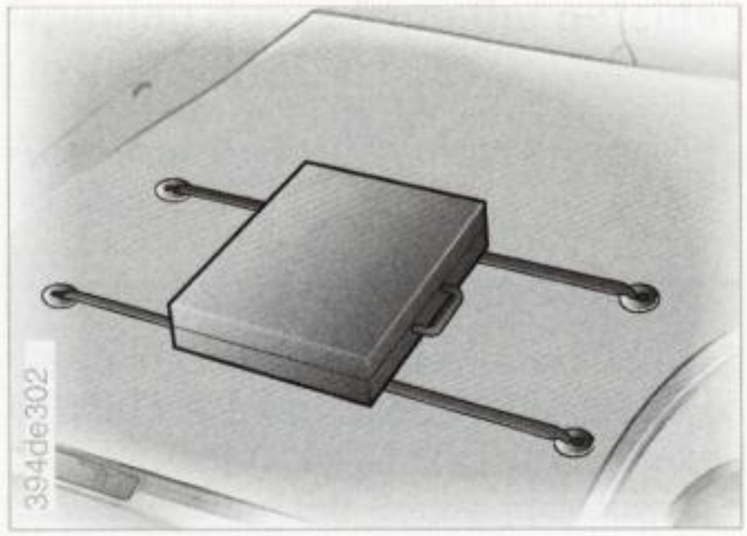

Luggage straps

Attach the straps to the floor of the luggage compartment to secure smaller suitcases.

The luggage straps prevent objects placed on them from slipping.

The fittings at the corners of the luggage compartment provide a means of attaching flexible straps for securing luggage.

See also under "Cargo loading", page 81.

Power windows*

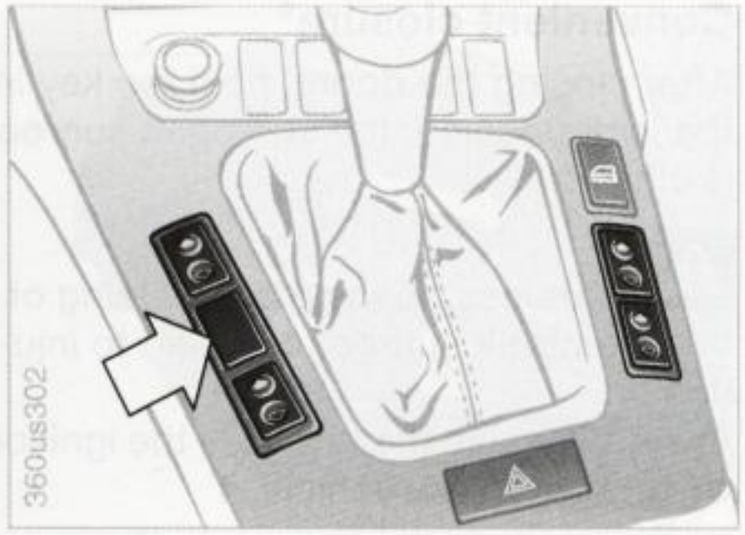

Operational from ignition key position 1.

- ▷ Depress the rocker switch until you feel resistance.
  The window continues to move as long as the rocker switch is pressed.
- ▷ Briefly press the rocker switch to just beyond the pressure point (one-touch mode):
  The window moves automatically.
  Press and let go again to stop movement.

The one-touch mode can be used to open and close the front windows and to open the rear windows*.

On vehicles equipped with front and rear* power windows:
There are separate switches located below the rear windows.

Safety switch* (arrow)

In this way the actuation of the windows by means of rear switches, e.g., by children, can be prevented.

⚠ Always keep the safety switch (arrow) in the depressed position when children ride in the rear seat.
Always remove the key from the ignition when leaving the vehicle.◀

After the ignition is switched off, the windows remain operational

- ▷ with the ignition key at position 1 and 0, or removed, or
- ▷ when the front doors are open (max. 15 minutes) or until the front doors are opened for the first time (depending on the national-market version).

Convenience mode

After closing the doors, hold the key in the lock position:
Any windows still open will close.

⚠ Careless and inattentive closing of the windows can lead to injuries.◀

Safety feature

If one of the windows encounters resistance while closing, it will respond by halting and then opening somewhat again.

You can deactivate this protective function, (e.g., in case of unauthorized intrusion into the vehicle) by pressing the switch beyond its pressure point and holding it there.

Sliding/tilt sunroof*

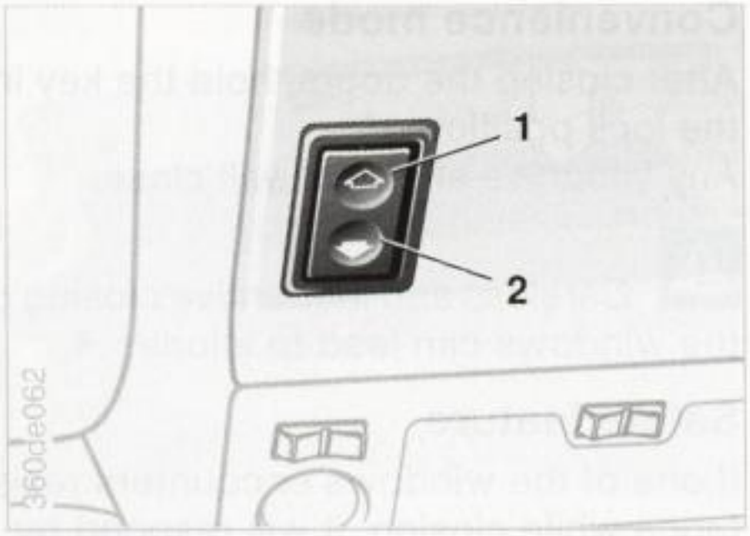

Operate in ignition key position 2.

Open and lower

Press recessed button (1) until pressure point is reached.

Close and raise

Press raised button (2) until pressure point is reached.
At transition from closing to raising and vice-versa: system off.

One-touch mode

(only open/raise)
Briefly press the respective button beyond the pressure point.
The sliding/tilt sunroof moves automatically. Briefly press the button a second time to stop the sunroof.

During raising, the headliner also retracts a few inches.◀

In the event of an electrical malfunction, you can operate the sliding/tilt sunroof manually, refer to page 130

After the ignition is switched off, the windows remain operational

- with the ignition key at position 1 and 0, or removed, or
- when the front doors are open (max. 15 minutes) or until the front doors are opened for the first time (depending on the national-market version).

Convenient closure*

After closing the doors, hold the key in the lock position: the still-open sunroof is closed.

Careless opening and closing of the sliding/tilt sunroof can lead to injuries.
Always remove the key from the ignition when leaving the vehicle.◀

To avoid unpleasant drafts and pressure variations within the passenger compartment, you should keep the interior ventilation outlets open when the sunroof is open and particularly when it is raised, and select a higher blower speed as required.

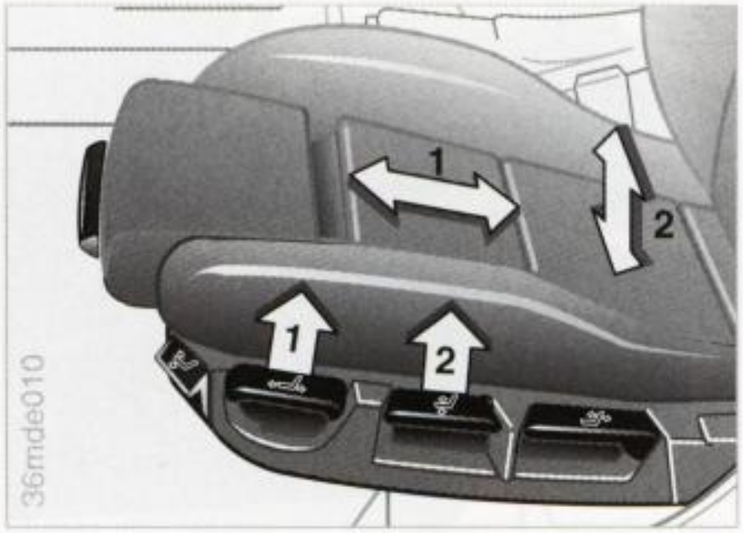

Longitudinal adjustment

Pull lever 1 and slide seat into desired position.

After releasing the lever, make sure that the locking device engages properly.

Height adjustment

Pull lever 2 and load or relieve seat as required.

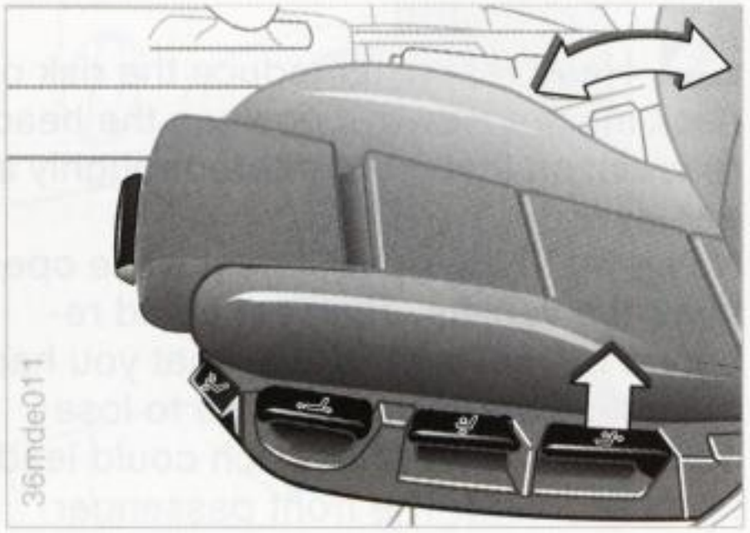

Backrest angle

Pull lever and load or relieve as required.

▷ You can reduce the load on your spinal column by sitting all the way back in the seat with your back pressed firmly against the backrest.
Ideal sitting posture is achieved with your head extending from your spine in a straight line.
For long-distance driving, you may wish to increase the backrest angle slightly to reduce muscular tension. Please remember that you should always remain able grasp the entire periphery of the steering wheel without straightening your arms.◀

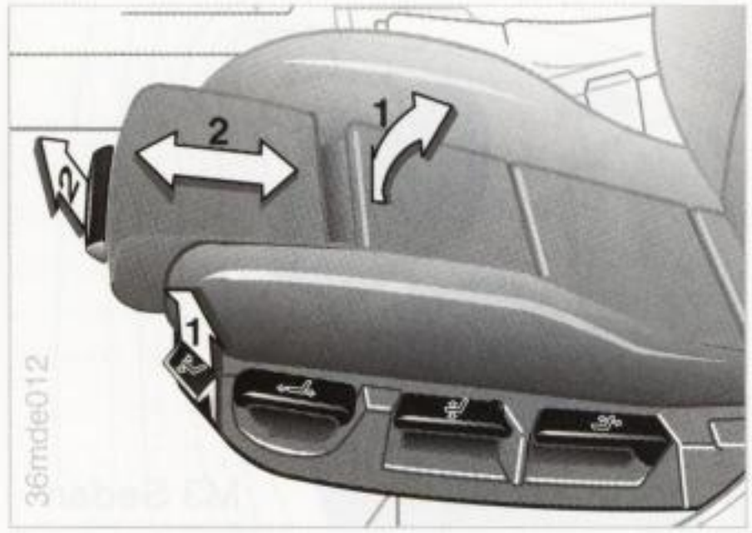

Angle adjustment

Pull lever 1 and move seat as required.

Thigh support adjustment

Pull lever 2 and slide front section of seat into the desired position.

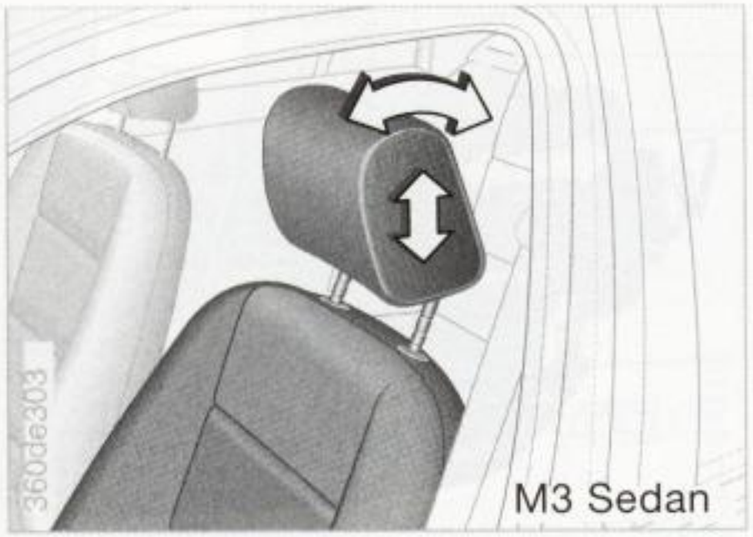

Front headrests

Adjust height by pulling out or pushing in.

Adjust angle by swiveling.

Rear head restraints

Adjust height by pulling out or pushing in.

⚠ Head restraints reduce the risk of neck injuries. Always position the head restraint so that it is centered roughly at ear level.

Never try to adjust your seat while operating the vehicle. The seat could respond by moving in a way that you had not anticipated, causing you to lose control of the vehicle which could lead to an accident. The front passenger should not move the backrest into the "reclined" position during driving. While driving, both the driver and the front passenger should keep the backrest relatively upright. Otherwise there is a danger of the occupants "sliding through" the belt in the event of an accident, thus considerably reducing the protective effect of the belt (see also safety precautions in the "Seat belts" section, page 37).◀

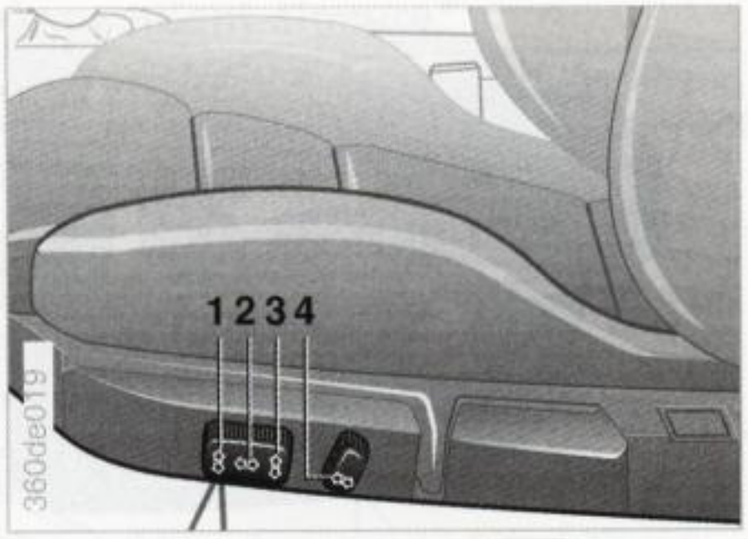

Electrical seat adjustment*

1 Angle adjustment
2 Longitudinal adjustment
3 Height adjustment
4 Backrest angle

The headrest and the thigh support are adjusted manually.

Adjusting steering wheel*

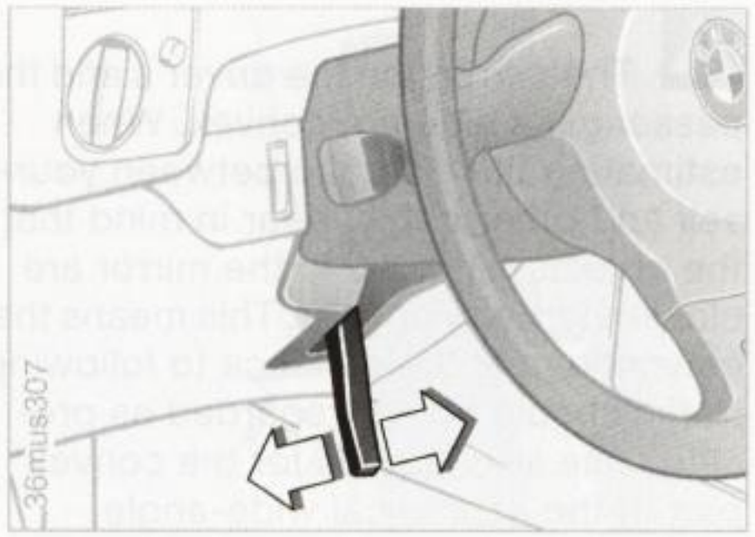

Releasing backrest*

Pull up lever: the backrest can now be folded forward.

The outer levers also serve as a storage point for the safety belt.

⚠ The front seat backrests must always be locked during driving.◀

- Pull out clamping lever.
- Adjust steering wheel tilt for your seating position.
- Pull the lever back in to clamp the steering wheel in the new position.

⚠ Never adjust the steering wheel while driving – accident danger.◀

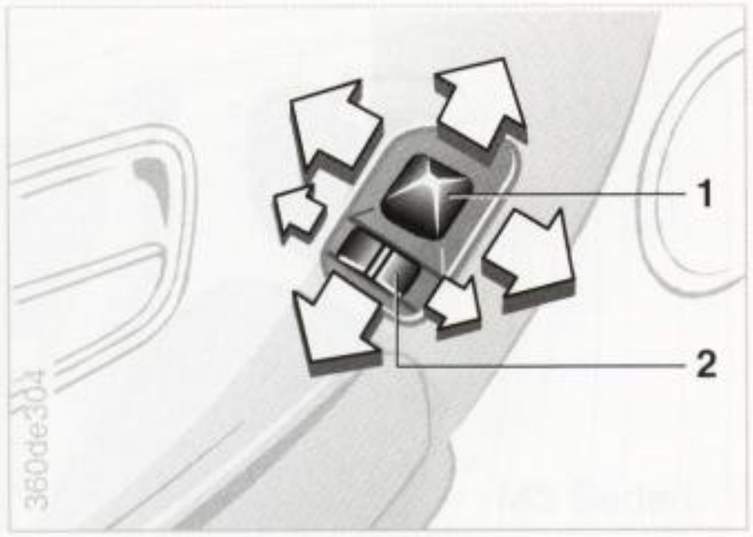

Exterior mirrors

1 Mirror switch for 4-way adjustment.

2 Switch for changing to the other mirror:

- Push switch to left – driver's mirror.
- Push switch to right – passenger's mirror.

You can also adjust the mirrors manually by pressing against the outer edges of the lens.

The mirrors on the driver's and the passenger's side are convex. When estimating the distance between yourself and other traffic, bear in mind that the objects reflected in the mirror are closer than they appear. This means that estimations of the distance to following traffic should not be regarded as precise. This also applies for the convex part of the aspherical wide-angle mirror.◀

Electric heaters

Both mirrors are heated automatically corresponding to the outside temperature with the ignition key in position 2.

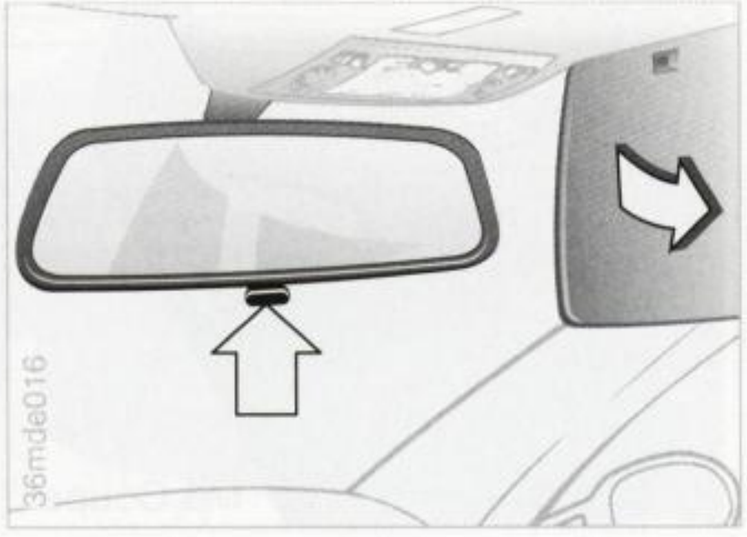

Inside rearview mirror

To reduce glare from behind during night driving: tilt small lever to dimmed position.

Lighted make-up mirror

Fold down the sun visor, slide the cover panel to the side.

The mirror lamps operate from ignition key position 1 onward.

Sun visors

These can be folded down toward the windshield or swiveled out against the side windows.

Safety belts

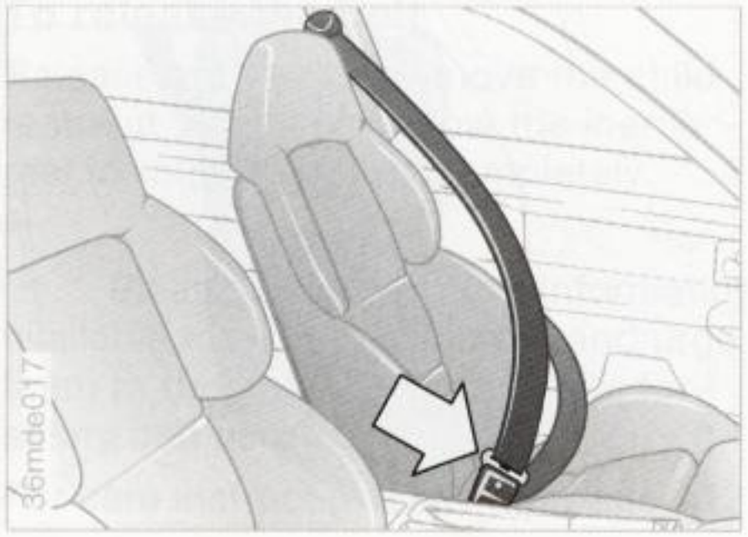

Always fasten your seat belt before starting off.

To close: make sure you hear the catch engage in the belt buckle.

To open: press the red button in the buckle, hold the belt and guide it back into its reel.

The safety belt inertial mechanism locks:

- in a sudden stop or crash
- when you pull it sharply
- during abrupt braking and acceleration
- in curves
- when the vehicle is at an extreme angle.

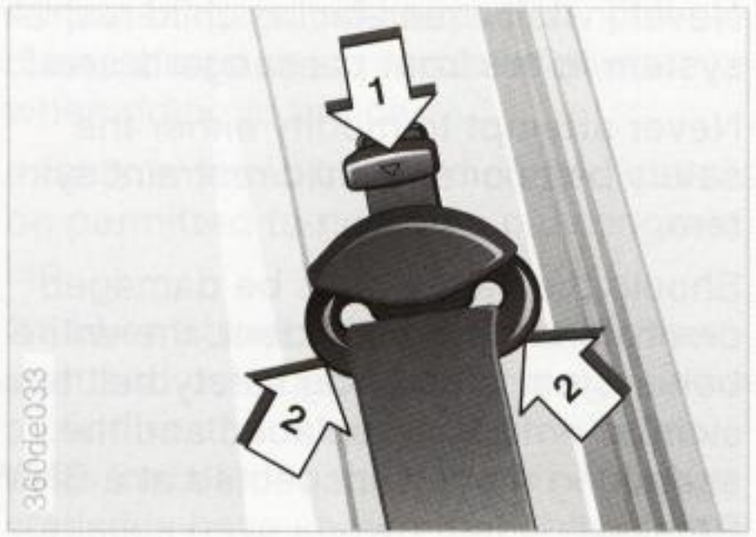

The safety belt can be adjusted individually to different body sizes with the belt height adjustment:

Downward adjustment (1):

Push button downward.

Upward adjustment (2):

Grasp deflection fitting on ribbed side sections and slide upward.

For your own safety, please observe the following when putting on the safety belt, otherwise its protective function may be impaired. Also ensure that the other occupants follow these instructions.

Never allow more than one person to wear a single safety belt. Never allow infants or small children to ride in a passenger's lap.

Avoid twisting the belt while routing it firmly across the hips and shoulder. Do not allow the belt to rest against hard or fragile objects in your pockets. The safety belt must not run across the wearer's neck, nor should it be trapped or abraded by coming into contact with sharp edges or objects.

The belt should rest as firmly as possible against your body, and you should therefore avoid wearing clothing that prevents it from doing so. Pull the belt periodically to retension it across your shoulder. In the event of a frontal collision, a loose lap belt could slide over your hips, leading to abdominal injury. Due to the increased distance between belt and body, there would also be a delay before restraint becomes effective.

Safety belts

Expectant mothers should always wear their safety belts, taking care to position the lap belt against the lower hips, where it will not exert pressure against the abdominal area.
Never attempt to modify the safety belts.◀

For care instructions refer to page 112.

Child restraint system

Never install a rear-facing child restraint system in the front passenger's seat!

Never attempt to modify either the safety belts or any child restraint system.

Should the safety belts be damaged or stretched in an accident, the entire belt system - including safety belt tensioners - must be replaced and the anchoring mounts inspected at a BMW Retailer.

If the safety belt tensioner has been activated, a distance of roughly 0.8 in. (20 mm) will remain between the safety belt lock and the tensioner module.

Installing child restraints

To install and secure child restraint systems, all rear safety belts (and the front passenger's safety belt) are equipped with a special locking mode.

A label with operating instructions is attached to the belt next to the latch plate.

To lock the belt

Extract the entire length of the belt from the inertia reel mechanism. Allow the reel to retract the belt somewhat and engage the buckle, then tighten the belt against the child restraint system. The retraction mechanism is now locked.

Always observe the installation instructions provided by the manufacturer of the child restraint system.

Child restraint system

To release the belt

Release the buckle, remove the child restraint device and allow the inertia reel to retract the belt completely.

Please also make this information available to your passengers and urge them to observe the instructions for safety belt use.◀

For care instructions refer to page 112.

Installing child seats

All passengers, and especially children, should use a restraint device when riding in the car.

Infants or small children should never be permitted to ride on a passenger's lap.

Children should always sit in the rear seat and use, depending on age, either a child restraint system or the safety belts installed in the vehicle. Accident statistics have shown that children are safer when properly restrained in the rear seats than when riding in the front.

Infants and toddlers should be secured with a child restraint system appropriate for their size.

Children of six years and older should wear safety belts.

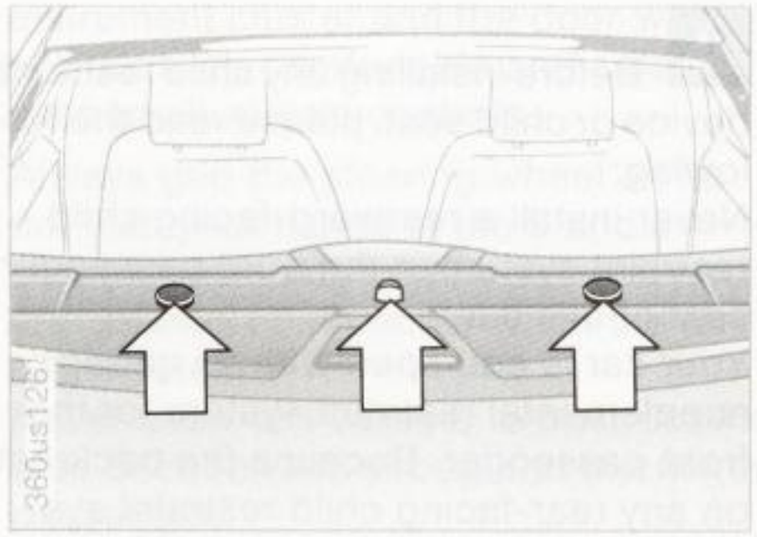

Commercially available child seats complying with legal standards are designed to be secured using either a lap belt or a combined lap-shoulder belt. Because improperly installed restraint systems can increase the risk of injury to children, we strongly urge you to carefully read and follow the instructions supplied with the system.

Should the child restraint system of your choice require the use of a securing or tether strap, note that three anchoring points (arrows) have been provided for mounting it in your vehicle.

Ask your BMW Retailer to perform the necessary installation work.

Installing child seats

⚠ Before installing any child restraint device or child seat, please read the following:
Never install a rearward-facing child restraint system in the front passenger seat of this car.
Your car is equipped with an airbag supplemental restraint system for the front passenger. Because the backrest on any rear-facing child restraint system (of the kind designed for infants under 1 year and 20 lbs.) would be within the airbag's deployment range, you should never mount such a device in the front passenger seat, as the impact of the airbag against the child restraint's backrest could lead to serious or fatal injuries.
If it is necessary for a child (not an infant) to ride in the front seat, certain precautions should be taken. First, move the passenger seat as far away from the instrument cluster as possible. This important precaution is intend-ed to maximize the distance between the airbag and the child. Older children should be tightly secured with the safety belt. Younger children should be secured in an appropriate forward-facing child restraint system that has first been properly secured with a safety belt.

We strongly urge you to carefully read and observe the instructions for installation and use provided by the child restraint's manufacturer whenever you use such a device.
Always ensure that all occupants (of all ages) remain properly and securely restrained at all times.◀

All rear seating positions in your vehicle meet the recommendations of SAE J1819, an industry recommended practice for securing child restraint systems in motor vehicles.

Airbags

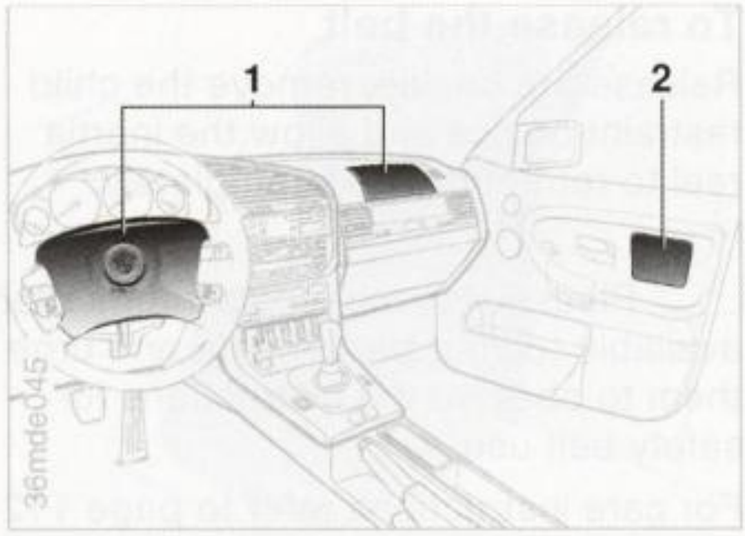

1 Front airbag system, consisting of driver and passenger airbag

2 Side airbags*

Protective effect

The front airbags provide additional protection for the front-seat occupants in the event of a severe frontal collision in which the protection afforded by the safety belts alone would no longer be sufficient. The side airbags help protect the front seat occupants in a severe side impact.

Airbags

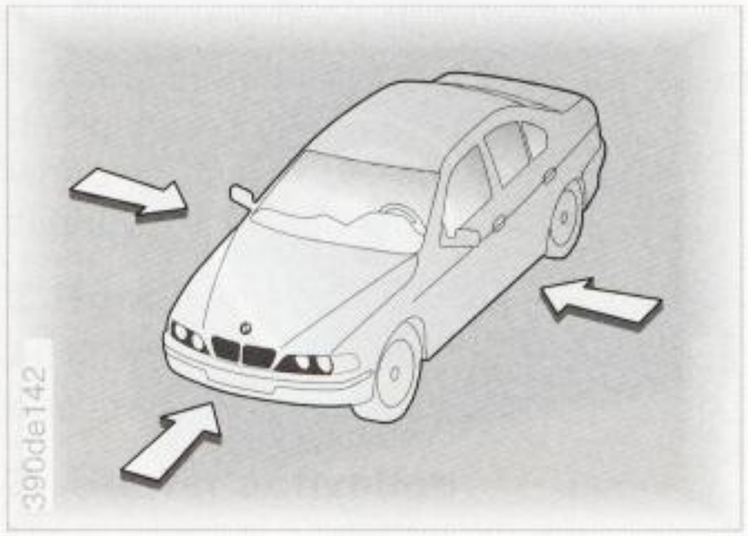

The airbags are triggered by impacts coming from the directions shown in the illustration. Note that the supplementary protection against lateral impact is available only on vehicles equipped with optional door-mounted airbags.

Indicator lamp in instrument cluster

The indicator lamp comes on from ignition key position 1 to indicate that the system is operational.

System operational:

- The indicator lamp comes on briefly.

System malfunction:

- The indicator lamp fails to come on.
- Indicator lamp lights up for approx. 4 seconds, goes out briefly and then lights up again.

A system malfunction could prevent the system from responding to an impact occurring within its normal response range.

Please have your authorized BMW Retailer inspect and repair the system as soon as possible.

For your own safety, please observe the following precautions concerning airbags, as otherwise their protective function may be impaired. We also request that you make this information available to your passengers, and that you urge them to observe the instructions for safety belt use: the airbags are a supplemental restraint device designed to provide extra protection; they are not a substitute for safety belts. Wear your safety belt at all times. The system does not respond to minor collisions, if the vehicle rolls over, or if the impact is at the rear of the vehicle. In this situation only the safety belt protects you.

When adjusting your seat, select a position that provides maximum distance between you and the steering wheel, the instrument cluster and the door while still allowing comfortable and safe access to all vehicle controls.

Always grip the steering wheel on its rim with your hands at the 9 and 3 o'clock positions, otherwise hand and arm injuries could occur when the airbag inflates.

Never allow any objects to obstruct the area between the airbag and the driver/passenger.

Do not use the cover panel above the passenger-side airbag as a storage area.

Do not glue, cover or in any way alter the padded covers on the steering wheel, the instrument cluster or the side trim panels of the front doors.

Do not install a rear-facing child restraint device on the front passenger seat. Children under 12 years of age should only sit in the back.◀

Even when all these guidelines are observed, there is still a residual risk of mild facial injuries occurring in isolated instances of airbag actuation. The ignition and inflation noise may induce a mild temporary hearing loss in sensitive individuals.

Airbag information is also located on the sun visors.

Airbags

Notes on safety

Never attempt to remove the gas generator for the airbag passenger-restraint system from the vehicle. Testing and service procedures are to be performed exclusively by qualified technicians. In the event of malfunction, deactivation or triggering (in response to an accident), always entrust repair and service operations to your authorized BMW Retailer.

Do not modify or tamper with either the wiring or the individual components in the airbag system; these include also the padded covers on the steering wheel, on the instrument cluster or on the side trim panels of the front doors. Never apply adhesive materials to these components and never cover or modify them in any way. Do not remove or dismantle the steering wheel.

The airbag generator can be disposed of only by a BMW Retailer.

Unprofessional attempts to service the system could lead to failure in an emergency or undesired airbag activation, either of which could result in personal injury.

Child-safety locks

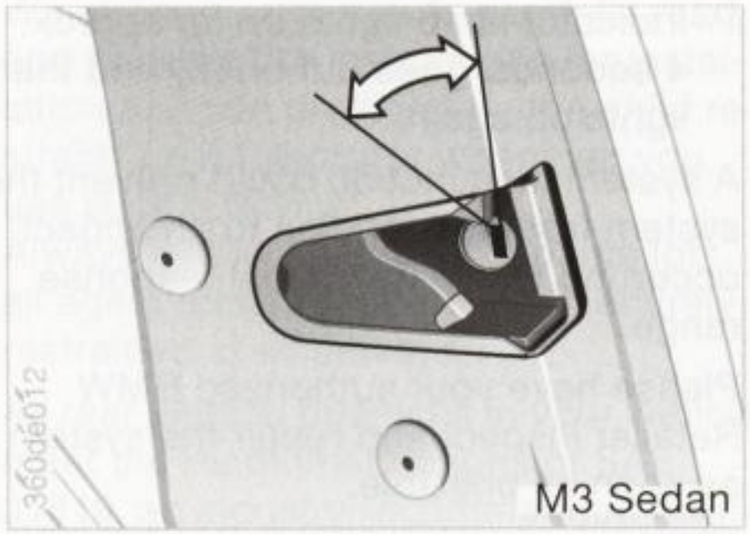

Insert the key in the slot in one of the rear door latch mechanisms and turn toward the outside: the door can now be opened from the outside only.

Steering/ignition lock

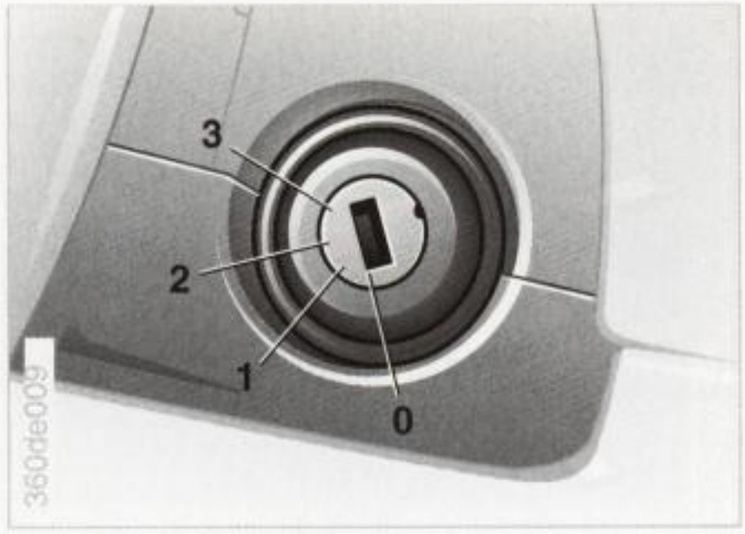

0 Steering lock engaged

The key can only be inserted and removed in this position.

After extracting the key, turn the steering wheel a small amount to the left or right until you hear the lock engage.

Your vehicle is equipped with an interlock; this means that the ignition key can not be turned into position 0 and removed until the selector lever is in position P.

Furthermore, the selector lever is locked in position P when the ignition key is in position 0 or removed from the ignition switch.

To turn the key back into position 0 or remove it, move the selector lever into position P first.

Steering/ignition lock

1 Steering lock disengaged

You will often find that it is easier to turn the ignition key from position 0 to 1 when you move the steering wheel slightly to help disengage the lock.

2 Ignition on

All electrical equipment and accessories are available for use.

3 Starter activation

Vehicles with manual transmission: depress the clutch pedal while you turn on the ignition, otherwise a blocking system will prevent the engine from starting.◀

Starting engine

Before starting

- Apply the parking brake.
- The manual-shift gear lever should be in neutral; the automatic transmission selector lever should be in P or N.
- At low temperatures keep the clutch pedal depressed.
- Start the engine without depressing the accelerator.

Do not operate the starter too briefly, but not longer than approx. 20 seconds. Release the ignition key as soon as the engine starts. Do not allow the engine to warm up by leaving it running while the vehicle remains stationary. Instead, drive off immediately at a moderate engine speed.◀

Should the engine fail to start on the first attempt, for instance, if it is very hot or cold:

- Stop and pause briefly before repeating the starting procedure. This prevents the spark plugs from becoming damp.
- Press the accelerator pedal halfway down while engaging the starter.

When starting a cold engine at extremely low temperatures (+5°F/-15°C or be-low) or at high altitudes (above 3,300 ft./1,000 meters), proceed as follows:

- At the first attempt, keep the starter engaged for a bit longer (approx. 10 seconds).
- Press the accelerator pedal halfway down while engaging the starter.

If you operate the vehicle for longer periods of time at high altitudes and very low temperatures, put into the engine an oil with a viscosity of 5W-30 (refer to page 104). Please contact your authorized BMW Retailer for additional information.

Never allow the engine to run with the vehicle standing in an enclosed area. The exhaust gases contain carbon monoxide, an odorless and colorless, but highly toxic gas. Breathing the exhaust gases poses an extreme health risk, and can lead to unconsciousness and death.
Never leave the vehicle unattended with the engine running, as such a vehicle represents a serious potential safety hazard.◀

Switching off engine

Turn the ignition key to position 1 or 0.

⚠ Never withdraw the ignition key while the vehicle is rolling. The steering wheel would lock while you are steering. Always remove the ignition key and engage the steering lock before leaving the vehicle.

Vehicles with manual transmission:
Always engage the parking brake when parking on slopes and inclined surfaces, since selecting 1st gear or reverse may not provide adequate resistance to rolling.

Vehicles with automatic transmission:
Place the selector lever in Park.◀

Parking brake

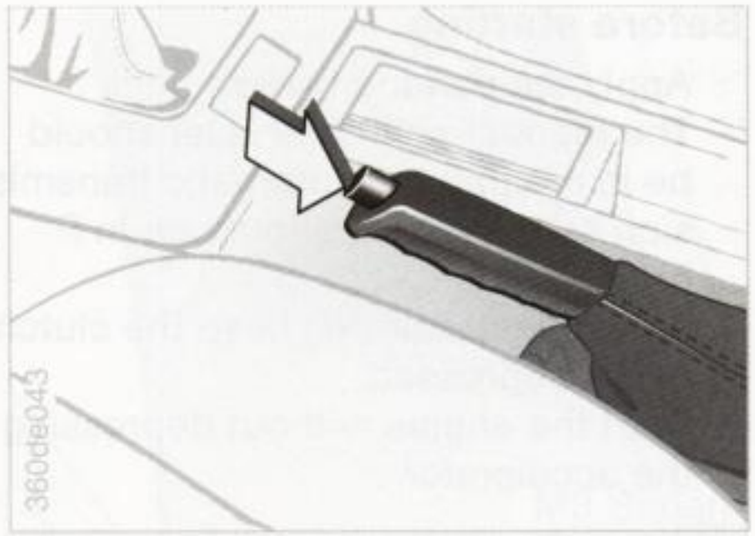

To engage

The lock engages automatically when you lift the lever. The "P" indicator lamp appears in the instrument cluster when you turn the ignition key to position 2 (refer to page 19).

To release

Pull up on the lever, then press the release button and lower the lever.

The parking brake is primarily designed to prevent the vehicle from rolling while parked, and acts on the rear wheels.

⚠ Should exceptional circumstances make it necessary to engage the brake with the vehicle in motion, only apply moderate pressure to the parking brake. Keep your thumb pressed against the release button while carefully pulling up the lever to apply moderate pressure. Excessive pressure can lead to over-braking and loss of traction (fishtailing) at the rear.

The brake lamps do not come on when the parking brake is engaged.

Vehicles with manual transmission:
Always engage the parking brake when parking on slopes and inclined surfaces, since selecting 1st gear or reverse may not provide adequate resistance to rolling.

Vehicles with automatic transmission:
Place the selector lever in Park.◀

To avoid corrosion, apply the parking brake lightly from time to time when coasting to a standstill, e.g., at a traffic signal, provided that it is safe to do so.

Manual transmission

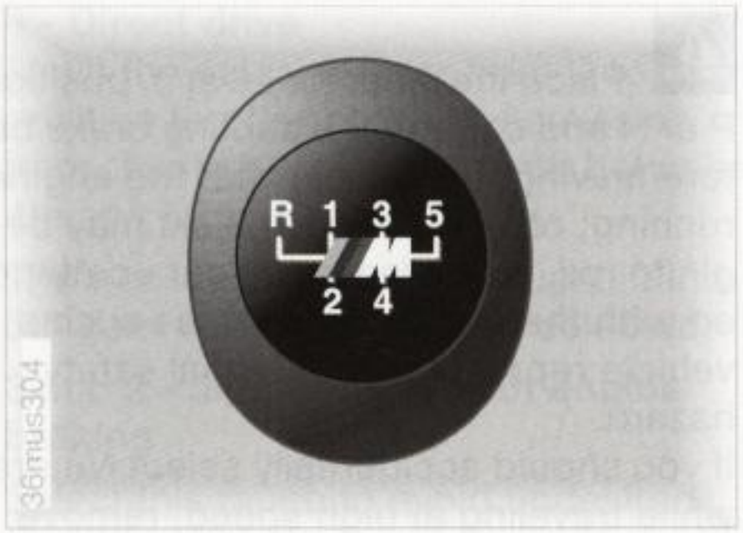

The shift lever's neutral plane (dot in the illustration) is located between 3rd and 4th gears.

Whenever you shift from any gear into "Neutral", the shift lever will automatically return to the specified gear plane.

Reverse

Select only with the vehicle stationary. Press the shift lever to the left to overcome the slight resistance.

Backup lamps

These come on automatically whenever you engage reverse with the ignition key in position 2.

Do not hold the vehicle in position on hills by slipping the clutch, but instead use the parking brake. A slipping clutch increases clutch wear.◀

Automatic transmission*

Available selector lever positions:

P R N D 4 3 2

You can also use the program switch to select from among three shift programs.

▷ E/A (Economy/ Automatic)	push switch
▷ M (Manual) ▷ S (Sports)	move switch to desired setting

See next page for an explanation of the programs.

Range selection

A lock prevents inadvertent shifts into some selector lever positions. To release the shift-lock mechanism, press the button on the front side of the selector handle (arrow).

The engine can only be started in selector lever position P or N.

▷ Before shifting out of P or N, depress the footbrake with the vehicle stopped, as otherwise the selector lever can not be moved.

The footbrake must also be depressed before selecting a drive position, since the vehicle "creeps" in idle when a drive position is engaged.

At engine speeds above 2,500 rpm, a locking mechanism prevents shifting out of P or N.◀

However, it is possible to "rock" the car free by shifting rapidly between D and R, e.g., should you get stuck in deep snow or sand.

⚠ Place the selector lever in position P or N and engage the parking brake before leaving the vehicle with the engine running; otherwise the vehicle may begin to roll. Never leave the car unattended with the engine running, as such a vehicle represents a potential safety hazard.

If you should accidentally select Neutral while traveling at high speed, remove your foot from the accelerator pedal immediately. Wait until the engine is at idle speed; only then should you select a gear, otherwise the transmission could be damaged.◀

P - Park

Select only with the vehicle stationary. This position locks the drive wheels.

R - Reverse

Select only with the vehicle stationary.

N - Neutral

Select this position only for extended periods of idling. The only time that this range should be engaged while underway is in response to sliding at the rear wheels.

D - Drive (automatic shift program)

This position is designed for driving under all normal operating conditions. All 5 gears are used.

4 - Direct drive
Move the selector lever from D to this position to prevent the transmission from "hunting" back and forth between 4th and 5th gears.

The transmission does not upshift into 5th gear when this range is selected.

3 and 2 - alpine range with engine braking

Select this range to avoid undesired upshifts, e.g., during steep ascents and on downhill stretches of the kind encountered in mountainous areas. This allows you to exploit engine braking for maximum effect, while upshifts are not executed beyond the selected gear.

These positions can be selected at any speed. However, the transmission will not downshift into the selected gear when excess engine speed would result. When you place the selector lever in second gear, the transmission continues to downshift into first gear and to execute automatic upshifts as far as second gear in the usual manner.

"Kick-down"
To obtain maximum acceleration, the accelerator pedal can be depressed beyond the normal full-throttle position, you can initiate an automatic downshift by maintaining pressure to overcome the stop.

The transmission responds by downshifting to provide you with maximum acceleration. When the kick-down is used, subsequent upshifts will occur at a much higher engine speed than usual.

If you then release the accelerator pedal suddenly, the lower gear remains briefly engaged; this feature is designed to ensure immediate response, should renewed acceleration be desired. Subsequent upshifts are then delayed until renewed but moderate pressure is applied to the pedal.

Transmission programs

S - Sport program
This program is designed for performance-oriented driving. It features delayed upshifts for optimal utilization of the vehicle's power reserves.

E - Economy program
This program is designed for maximum fuel economy; it is also the default mode selected automatically at every start.

M - Manual program
This program is for driving in a single gear. The gear is also used for starting off, and downshifts for acceleration will also be suppressed. When you select D in this program, operation will be restricted to the currently selected gear.

For instance, on steep hills and when towing a trailer, it can be a good idea to select Position 1 or 2 - the transmission refrains from executing undesired shifts.

Indicator lamp for transmission control module

This lamp goes out once you start the engine.

- Should the indicator lamp fail to go out, or
- if it comes on during normal vehicle operation.

this indicates a malfunction in either the transmission control module or the transmission itself.

Bring the vehicle to a stop, select transmission position "P", set the parking brake and turn the engine off (ignition key to position 0).
Wait a few seconds, then start the engine.
If the indicator lamp goes out after a few seconds, normal transmission performance has been restored. Drive off normally.

Automatic transmission*

If the indicator lamp does not go out, all selector lever position can still be selected, however in the forward positions the vehicle has limited performances as it drives only in the 3rd or 4th gear.

If this happens, avoid extreme engine loads and consult your nearest BMW Retailer.

⚠ Never perform work or carry out inspections in the engine compartment without first ensuring that P or N is engaged. Never allow children to remain in the vehicle unattended.

Always make certain that the selector lever is at P and the parking brake engaged before leaving the vehicle.

Failure to observe these precautions could result in sudden and unexpected vehicle movement.◀

For information on towing and jump-starting, refer to pages 131 and 132.

Turn signals/high beam

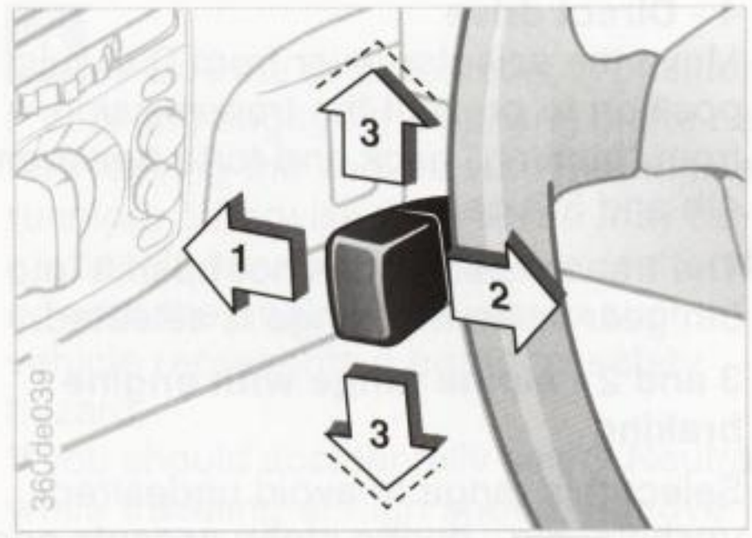

1 High beam (blue indicator lamp)

2 Headlamp flasher

3 Turn signal indicator (green indicator lamp and rhythmic ticking of the blinker relay).

Flashing of the indicator lamp and ticking faster than normal: a turn-indicator lamp is defective.

To signal briefly

Press the lever up to but not beyond the lock.

Wiper/washer system

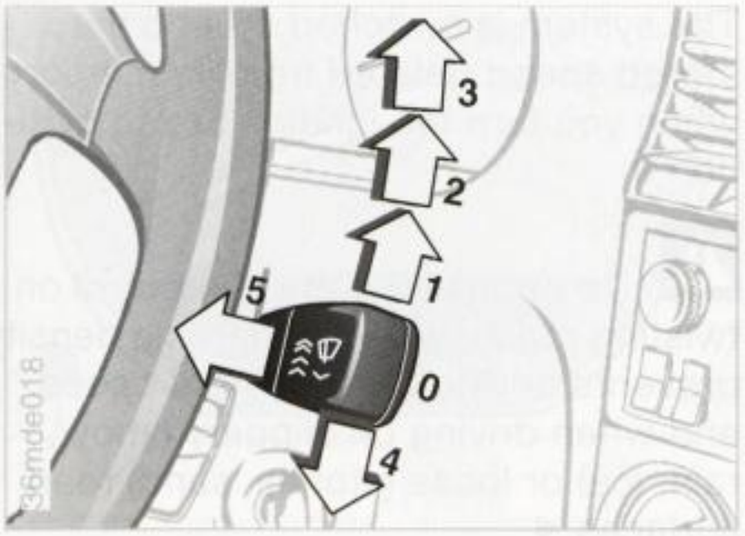

0 Wipers retracted
1 Intermittent wipe
2 Normal wipe
3 Fast wipe
4 Brief wipe
5 Automatic windshield washer

1 Intermittent wipe

The length of the interval is varied automatically according to the car's actual road speed.

The headlamp cleaning equipment* can also influence this interval.

- Shift briefly out of 0 into 1, and back to 0.
- The time lapse until the switching on (out of 0 into 1) is the desired interval (maximum 25 seconds).

Delete the programming:

- approx. 10 seconds after the lever is in position 0 or
- after switching off the engine.

2 Normal wipe

The wipers automatically revert to intermittent operation when the vehicle is stationary.

5 Automatic windshield washers

The system sprays washer fluid against the windshield and actuates the wipers for a brief period.

(Exception: if you pull the lever briefly, the system sprays fluid onto the windshield without activating the wipers).

⚠ Do not use the washers when there is a danger of the fluid freezing on the windshield, as otherwise your vision could be obscured. Use antifreeze, refer to page 102.
Do not use the washers when the reservoir is empty, otherwise damage to the washer pump could result.◀

For information on how to change the wiper blades, refer to page 118.

Windshield washer jets*

The windshield washer jets are automatically heated with the ignition key in position 2.

Cruise control*

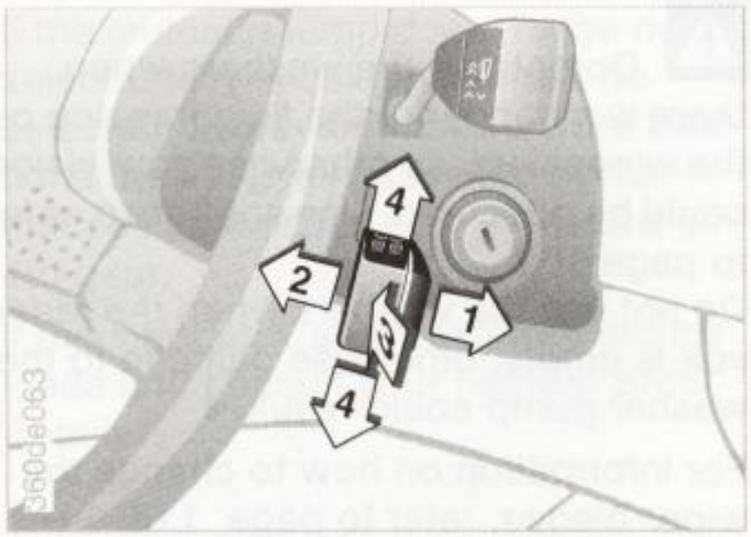

You can store and automatically maintain any desired vehicle speed above approx. 25 mph (40 km/h).

The stored speed is deleted when the motor is switched off.

1 Accelerate

Tap the lever briefly:
The system records and maintains the current vehicle speed. Every time you tap the button the speed increases by approx. 0.6 mph (1 km/h).

Hold the lever in this position:
The vehicle accelerates without pressure on the accelerator pedal. As soon as you release the lever, the system records and maintains the current speed.

2 Decelerate

Hold the lever in this position:
With the cruise control active, the system automatically reduces the throttle opening to slow the vehicle. As soon as you release the lever, the system records and maintains the current speed.

Tap the lever briefly:
Each time you tap it you decelerate approx. 0.6 mph (1 km/h) if you are cruising at a controlled speed.

3 Resume

Tap the lever briefly:
The vehicle accelerates to and maintains the last speed stored.

4 Off

Tap the lever briefly:
Immediately deactivates the cruise control.

In addition, the system is also automatically disabled in response to the following conditions:

- When braking and activating the clutch
- If you exceed the programmed speed by more than 10 mph (16 km/h) for a period of more than 30 seconds.

The system is switched off and the stored speed deleted from its memory when you turn the ignition key to position 0.

⚠ Do not use the cruise control on twisting roads, when high traffic density prevents driving at a constant speed and when driving on slippery (snow, rain, ice) or loose (stones, sand) road surfaces.◀

▷ If, on a downhill gradient, the engine braking effect is not sufficient, the controlled speed can be exceeded. It can be dropped below on uphill grades if the engine output is insufficient.◀

Odometer

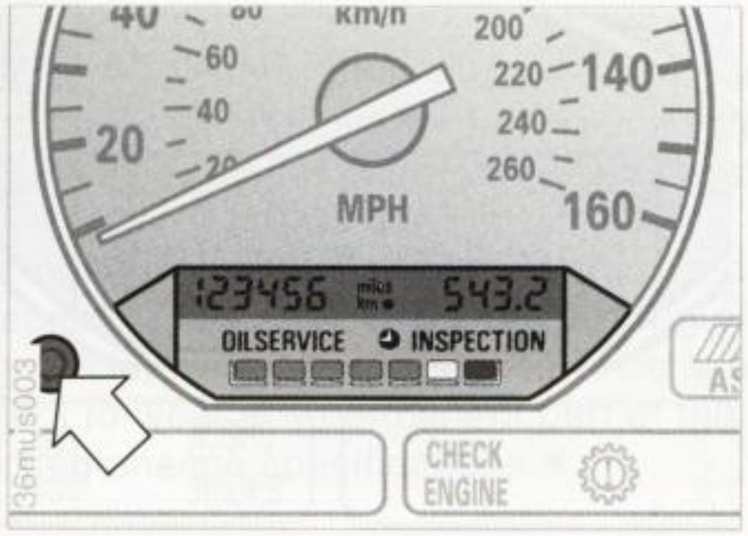

Records total vehicle mileage.

Trip odometer

Records trip distances of up to 999.9 miles or km.

To reset to zero

Press button.

The displays appear from ignition key position 1.

To display with ignition switched off: Press the reset button (arrow).

Tachometer

Never allow the engine to operate with the needle in the red overspeed sector of the gauge.

In this range the fuel supply is interrupted to protect the engine, producing the sensation of a loss of power.

Energy control*

Indicates the current fuel consumption in mpg (or in liters per 100 km on Canadian vehicles).

This instrument shows whether your current driving style is conducive to economy.

When the vehicle is stationary, the needle drops to zero (or moves to maximum reading on Canadian vehicles).

Fuel gauge

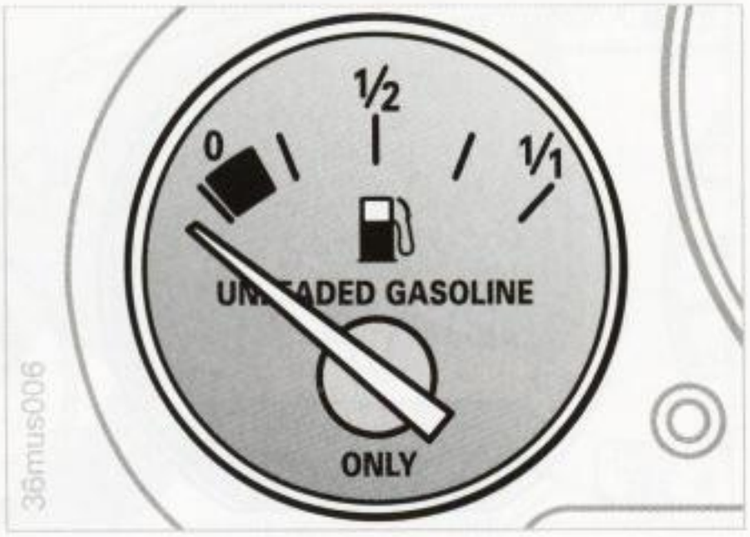

When you switch on the ignition, the indicator lamp comes on briefly to indicate that the system is operational.

If the indicator lamp begins to light up continuously, approx. 2.1 gal. (8 lt.) of fuel remains in the tank.

Tank volume: Page 140

Certain operating conditions (such as those encountered in mountainous areas) may cause the needle to fluctuate slightly.

⚠ Please refuel early, as driving to the last drop of fuel can result in damage to the engine and/or catalytic converter.◀

Coolant temperature

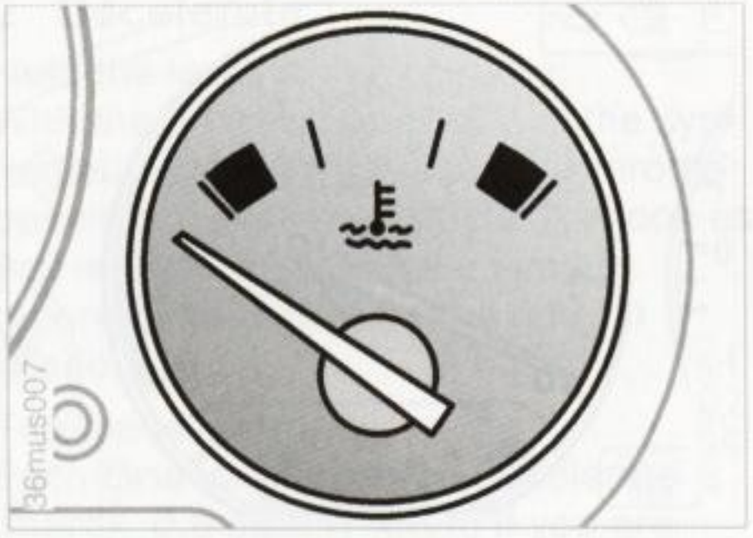

Blue

The engine is still cold. Drive at moderate engine and vehicle speeds.

Red

Indicator lamp comes on, the warning "COOLANT TEMPERATURE" appears in Check Control*: engine overheated. Switch off the engine immediately and allow it to cool down.

Between the blue and red sectors

Normal operating range. It is not unusual for the needle to rise as far as the edge of the red sector in response to high outside temperatures or severe operating conditions.

Checking coolant level: Page 105

Service Interval Display

Green lamps

The number of illuminated lamps decreases as the time for your next maintenance visit approaches.

Yellow lamp

This field appears together with OILSERVICE or INSPECTION.

Maintenance is due. Please contact your BMW Retailer for an appointment.

Red lamp

Maintenance overdue.

Service Interval Display

Have your BMW Retailer carry out the maintenance and repair. Your BMW Retailer is always informed on the latest maintenance work and repair techniques and equipped with the required special tools. In addition, the testing of parts known from experience to be subject to wear is a permanent part of the maintenance specifications.◄

Multi-information display (MID)*

With the different versions you can display not only the time and the date, but also information e.g., on economical driving and warnings on defective systems.

The following applies to all versions:

The unit will reject implausible entries.

When entering numerical values with the number entry keys, the numerical value is increased by one each time the key is pressed and after each additional half second with the key held down.

Numbers can be entered in any order.

The entries are saved in the memory by pressing the SET/RES or SET key.

Any interruption in the power supply, e.g., when changing the battery, will result in the loss of all data saved in the memory. After the power supply is restored, you will need to re-enter the time, date and any switch-on times, the distance or speed warning threshold.

Check Control

For explanations and operating instructions, refer to pages 55 ff.

Multi-information display (MID)*

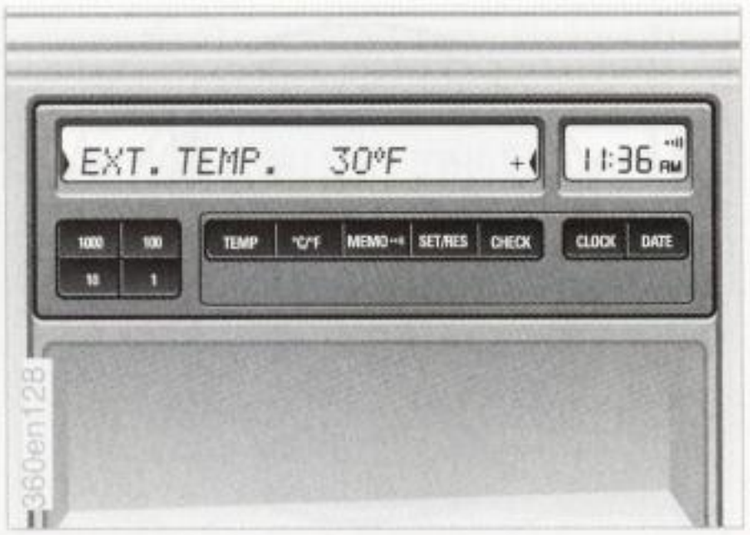

Check Control with outside temperature display and digital clock

For explanations and operating instructions, refer to pages 58 ff.

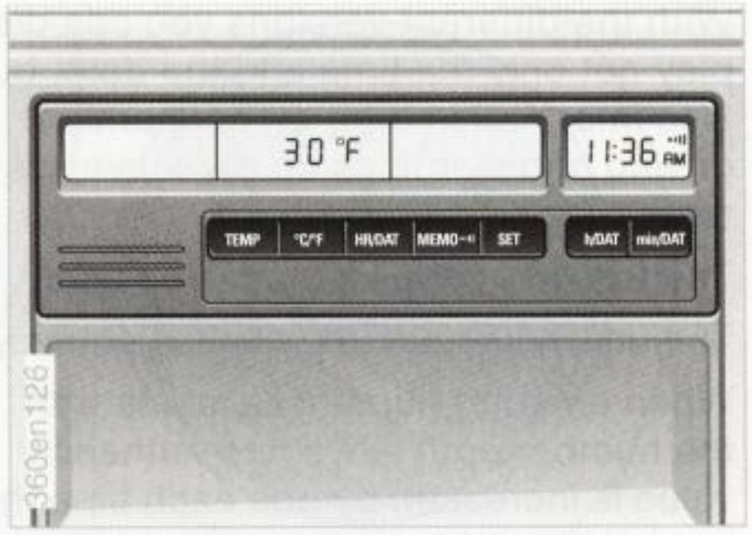

Onboard computer

For explanations and operating instructions, refer to pages 61 ff.

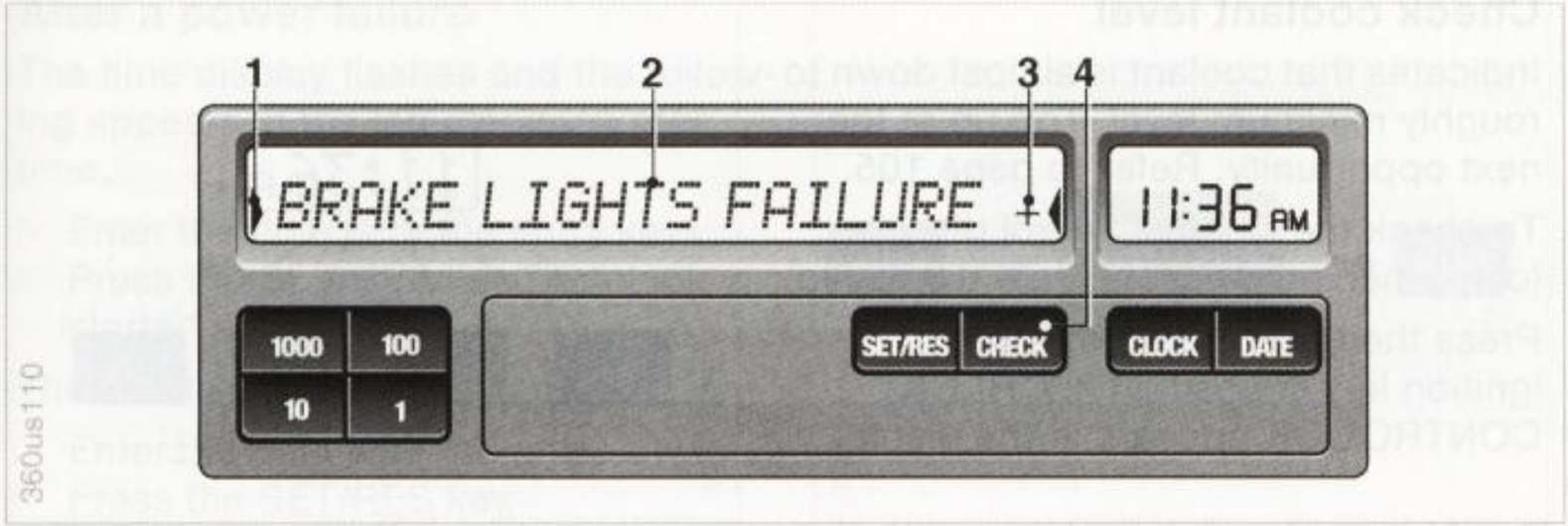

Texts with messages and warnings are used to alert the driver to defective systems. In addition, there is a warning lamp in the instrument cluster.

The time and date can be displayed with the digital clock.

1 Status report symbol

2 Display

3 Plus symbol for additional messages

4 CHECK key

The defective-system messages are divided into 3 different priorities:

Priority 1

These defects are indicated immediately with the flashing warning lamp and the flashing warning symbol (1). Several simultaneous defects are displayed consecutively. After 20 seconds or when the CHECK key is pressed, the warning lamp in the instrument cluster stops flashing.

The messages continue to be displayed until the defects are eliminated and can not be deleted by pressing the CHECK key (4).

Brake lamp electrical system

The brake lamps have failed. Fuse or electrical circuit is defective. Refer to page 129 or consult your BMW Retailer.

Brake lamps defective

Brake lamps have failed - bulbs defective.

Replace bulbs. Refer to page 121.

Priority 2

These defects appear when the ignition key is in position 2. The warning symbols remain after the message disappears. If the plus symbol (3) appears: Additional messages are present and can be displayed by pressing the CHECK key.

1 Brake lamp defective

A bulb has failed. Refer to page 121.

Low beams defective,

Backup lamps defective,

License plate lamp

Bulb has failed or fuse or electrical circuit defective. Refer to pages 119, 121, 122 or consult a BMW Retailer.

Washer fluid low

Too low, top up at next opportunity. Refer to page 102.

Check Control inactive

Messages and warnings can not be displayed. See BMW Retailer.

Priority 3

These status reports usually appear after the car is parked and the ignition key returned to position 0 (if several messages have been recorded, they will appear consecutively, with Priority 3 messages following Priority 1 and 2 messages).

Messages remain available for a period of approx. two minutes after the display goes out and the ignition key has been removed, and can be displayed by pressing the CHECK key.

The messages can also be displayed before you start driving with the ignition key in position 2. The texts then go out after a short time or when you start driving, and no warning symbols remain.

Messages are not displayed again until the ignition key is turned to position 0.

If a plus symbol appears: display additional messages by pressing the CHECK key.

Check coolant level

Indicates that coolant is almost down to roughly minimum level. Top up at the next opportunity. Refer to page 105.

To check the Check Control display (only when no messages are displayed):

Press the CHECK key with the ignition key in position 2: CHECK CONTROL OK appears in the display.

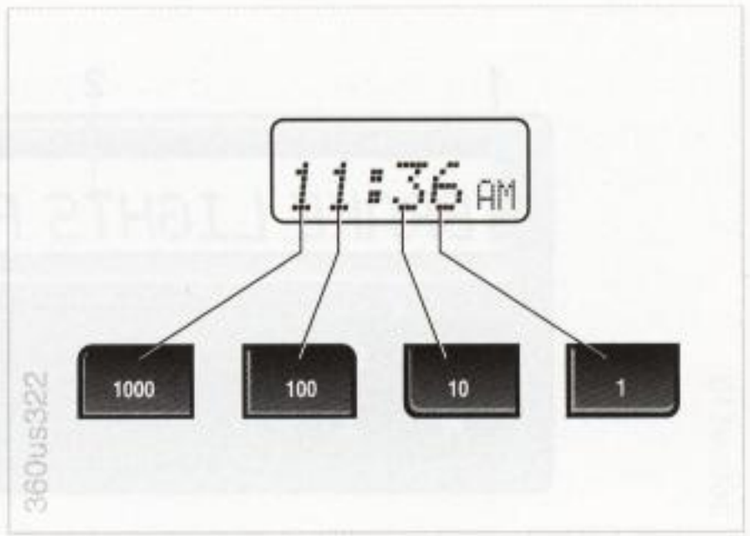

Entries

All numbers for the time and date are entered with the entry keys according to the following principle:

The numbers can be entered in any order. Each time the key is pressed, or for each half second the key is held down, the numerical value increases by one.

To display time and date

▷ Press the respective function key (CLOCK/DATE).

When the ignition key is in position 0 or removed, the displays appear for a few seconds; in ignition key position 1 the desired value is displayed indefinitely.

After a power failure

The time display flashes and the following appears in the left display: Enter time.

- Enter the time with the entry keys.
- Press the SET/RES key. The clock starts.

The left display shows: Enter date.

- Enter the date with the entry keys.
- Press the SET/RES key.
- Confirm the year by pressing the SET/RES key or correct it with the entry key and complete the number entry by pressing the SET/RES key.

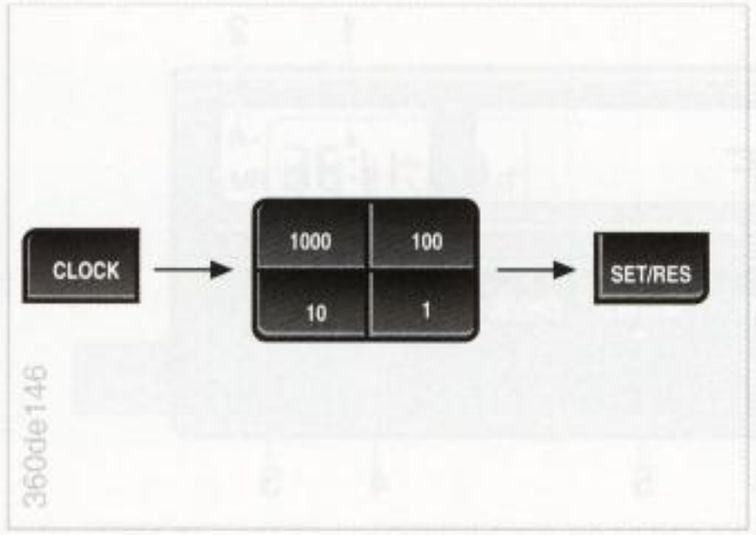

To reset the time

Press the CLOCK key until the left display indicates: Enter time. The dots flash.
Complete the number entry by pressing the SET/RES key.

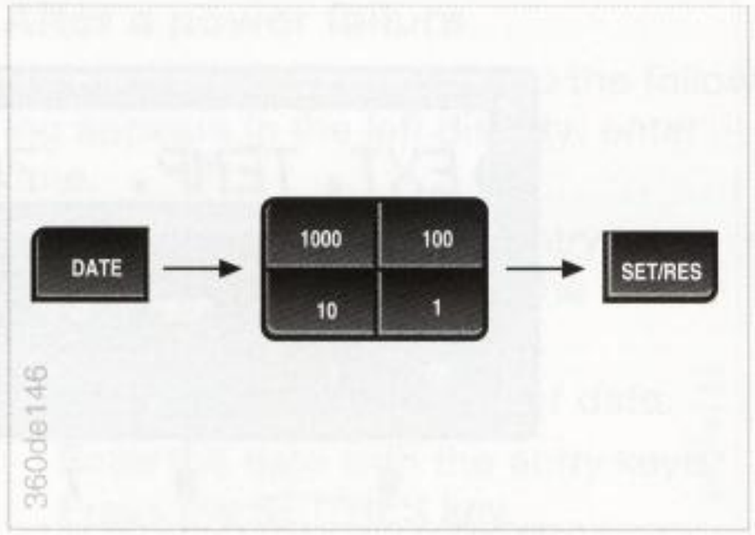

To reset the date

Press the DATE key until the left display indicates: Enter date. The dots flash.
Complete the number entry for the date and year by pressing the SET/RES key.

If necessary, enter the year before pressing the SET/RES key, as requested in the display. Leap years are programmed into the system and therefore need not be taken into account.

Check Control with outside temperature display and digital clock*

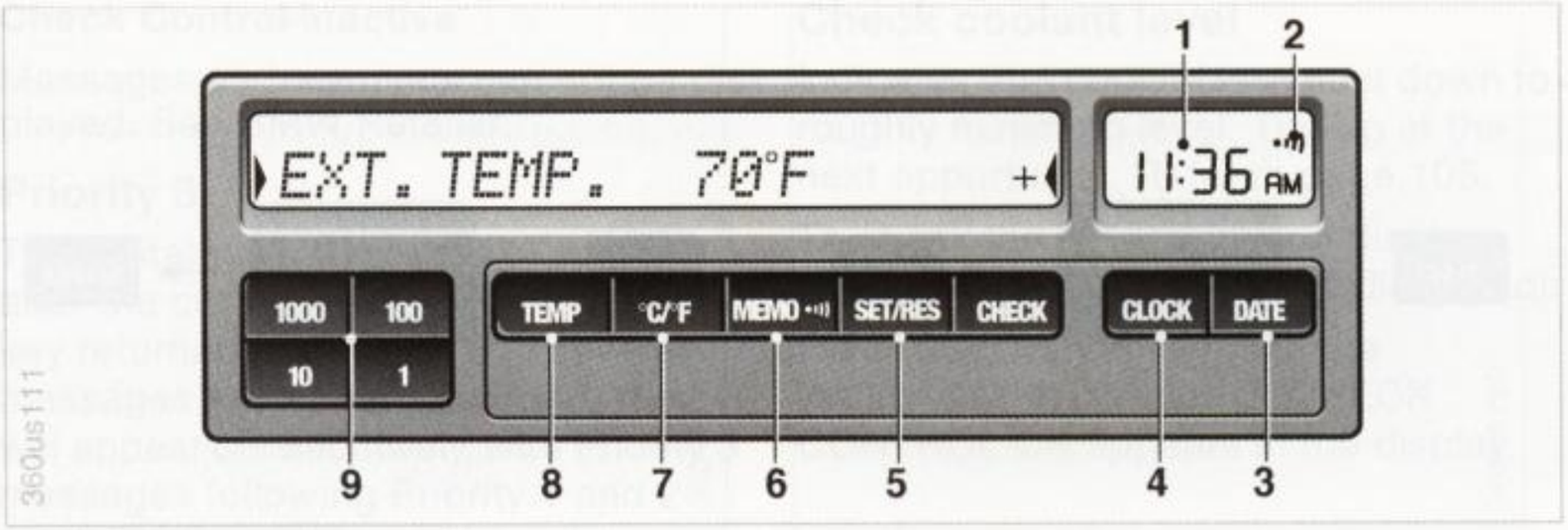

The Check Control uses texts with messages and warnings to alert the driver to defective systems. In addition, an indicator lamp is provided in the instrument cluster. For details and operating instructions, refer to pages 55 and 56.

The outside temperature can also be displayed.

With the digital clock you can

- display the time and date,
- pre-program an hourly reminder signal (memo) e.g., a reminder of the news.

1 Digital clock display
2 Tone symbol for active memo function
3 Function key - date
4 Function key - clock
5 SET/RES key
6 Function key - memo
7 Scale selection key
8 Function key - outside temperature
9 Entry keys for numerical values

To display time and date

- Press the respective function key (4/3).

When the ignition key is in position 0 or removed, the displays appear for a few seconds; in ignition key position 1, the desired value is displayed indefinitely.

You can display the time in 12 or 24 hour increments; the date can be shown in European or US sequence. To change setting:

- Press time or date function key (4/3) until the dots flash.
- Press scale selection key (7).

In the 12-hour mode, AM or PM will appear on the right side of the clock display.

Memo mode

Switch on and off with the MEMO key.

When MEMO is active, a tone symbol appears in the right display. The signal sounds every hour at the pre-programmed time or without programming 15 seconds before each full hour.

Check Control with outside temperature display and digital clock*

Display outside temperature

Press TEMP key.

If the outside temperature drops below 37.5 °F (+3 °C), a warning signal sounds, the temperature display automatically appears and flashes for 8 seconds.

The warning is repeated whenever the temperature has increased to 43 °F (+6 °C) at least once before falling to 37.5 °F (+3 °C) again.

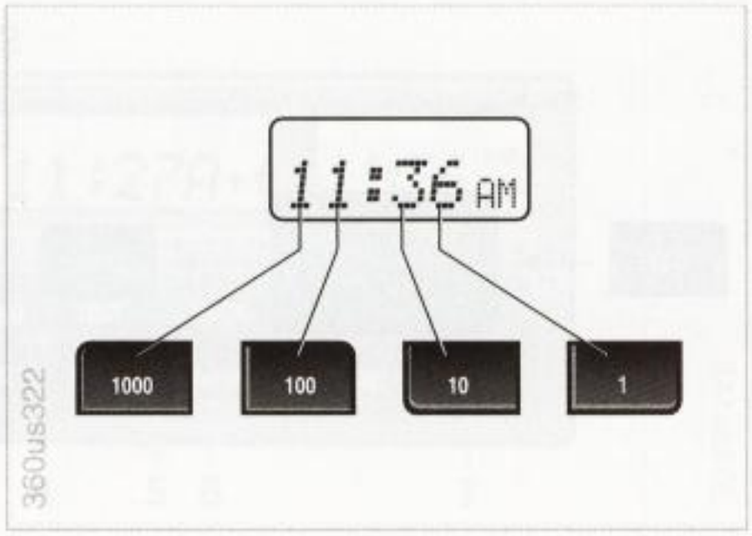

⚠ The temperature warning device does nothing to alter the fact that surface ice can still form at temperatures above 37.5 °F (+3 °C), e.g., on bridges and on shade-covered road surfaces.◀

Entries

All numbers for the time and date are entered with the entry keys according to the following principle:
The numbers can be entered in any order. Each time the key is pressed, or for each half second the key is held down, the numerical value increases by one.

After a power failure

The time display flashes and the following appears in the left display: enter time.

- ▷ Enter the time with the entry keys.
- ▷ Press the SET/RES key. The clock starts.

The left display shows: Enter date.

- ▷ Enter the date with the entry keys.
- ▷ Press the SET/RES key.
- ▷ Confirm the year by pressing the SET/RES key or correct it with the entry key; complete the number entry by pressing the SET/RES key.

Check Control with outside temperature display and digital clock*

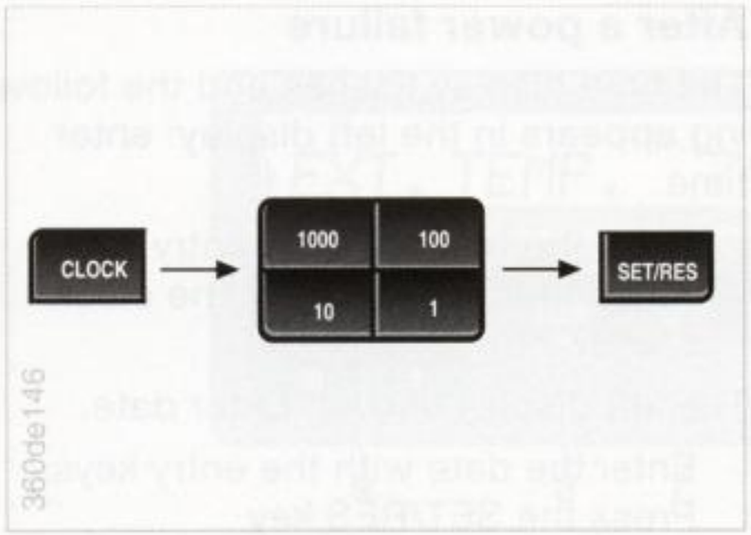

To reset the time

Press the CLOCK key until the left display indicates: Enter time. The dots flash. Complete the number entry by pressing the SET/RES key.

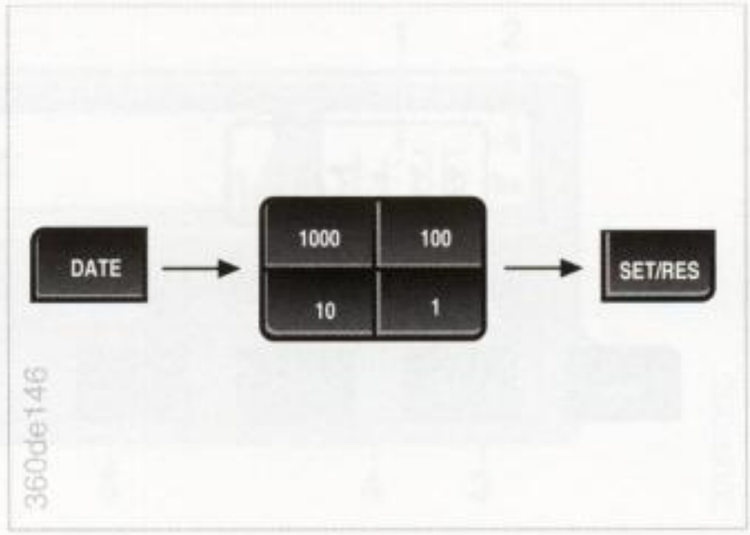

To reset the date

Press the DATE key until the left display indicates: Enter date. The dots flash. Complete the number entry for the date and year by pressing the SET/RES key.

If necessary, enter the year before pressing the SET/RES key, as requested in the display. Leap years are programmed into the system and therefore need not be taken into account.

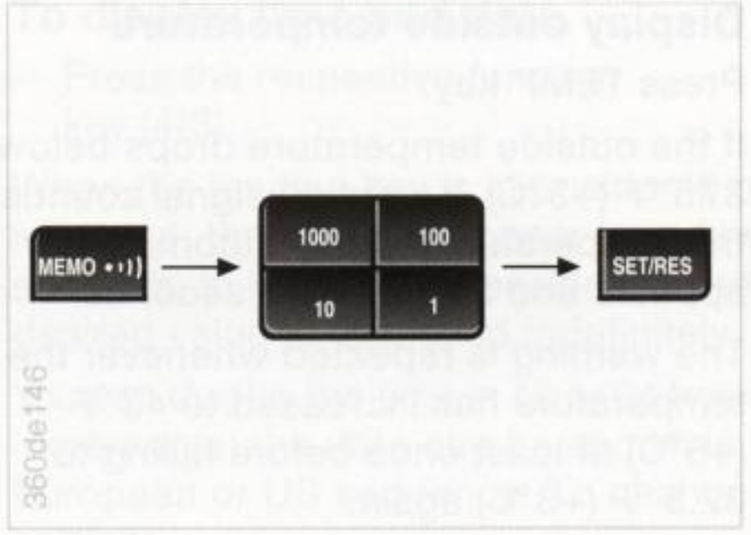

Programming a reminder signal

Press the MEMO key for approx. 3 seconds until the left display indicates: Enter memo. Complete the number entry by pressing the SET/RES key.

Onboard computer*

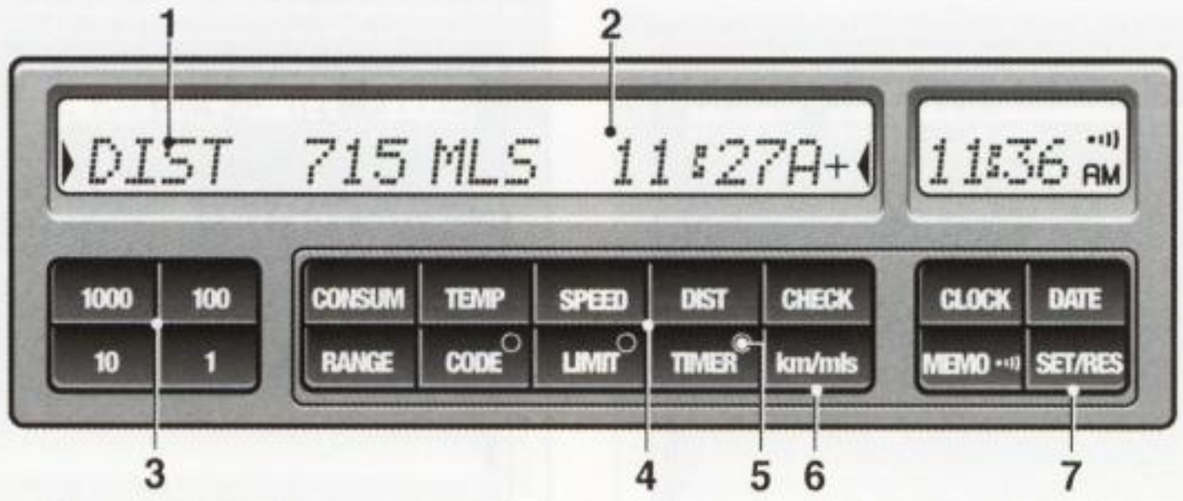

Allows you to select display data for safe and economical driving.

If your car is equipped with the Check Control option, texts with information and warnings are used to alert the driver to system malfunctions. In addition, an indicator lamp is provided in the instrument cluster. For details and operating instructions, refer to pages 55, 56.

With the digital clock you can

- display the time and date,
- pre-program a reminder signal (memo), e.g., to remind you of news broadcasts.

Refer to page 58 for information and details on using the digital clock.

1 Display
2 Arrival time
3 Entry keys for numerical values
4 Information key
5 Light-Emitting Diodes (LEDs)
6 Scale selection key
7 SET/RES key (start/stop)

Standard displays (no previous data entries required)

		Page
TEMP	outside temperature	62
RANGE	estimated cruising range	63
SPEED	average speed	62
CONSUM	2 levels of average consumption	63

With previous data entries

DIST	distance remaining to destination with estimated arrival time	63
LIMIT	speed limit warning	64

The following systems are controlled by the onboard computer:

		Page
TIMER	– 2 switch-on times for independent ventilation	65
	– independent ventilation in direct operating mode or	66
	– timer	64
CODE	immobilization/ protection from misuse	66

The onboard computer operates at ignition key positions 1 and 2.

Onboard computer*

In the interest of driving safety, you should always enter data with the vehicle parked/stationary. The onboard computer starts its calculations as soon as the vehicle starts to move.

You can also use the remote control to select information for display, refer to page 67.

The scale selection key (6) allows you to display all information in either metric or US units.

Messages of the Check Control system override the display of the onboard computer.
With the exception of Priority 1 messages, the display can be cleared by pressing the CHECK key.◀

If the malfunction display "PPPP" appears, consult your BMW Retailer.

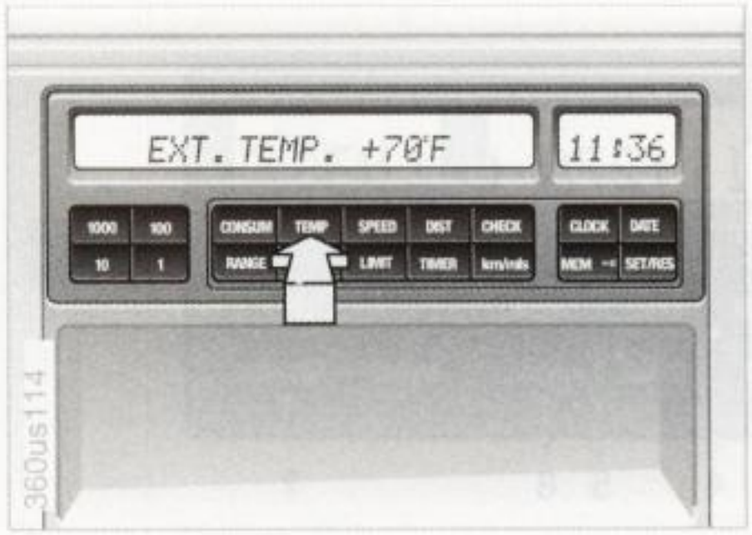

Outside temperature

Data request: press TEMP key.

If the outside temperature drops below 37.5 °F (+3 °C), a warning signal sounds; the temperature display automatically appears and flashes for 8 seconds.

The warning is repeated whenever the temperature has increased to 43 °F (+6 °C) at least once before falling to 37.5 °F (+3 °C) again.

The temperature warning device does nothing to alter the fact that surface ice can still form at temperatures above 37.5 °F (+3 °C), e.g., on bridges and on shade-covered road surfaces.◀

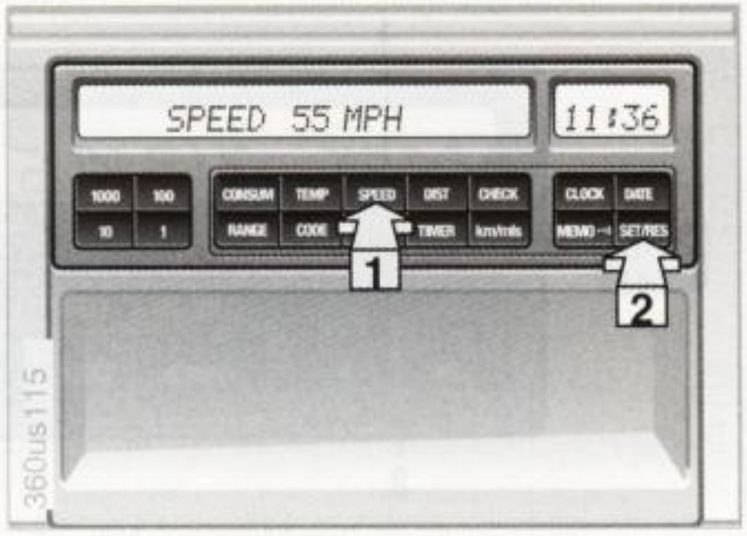

Average speed

To start calculations:

Key sequence as in illustration.

Data request: press SPEED key.

Onboard computer*

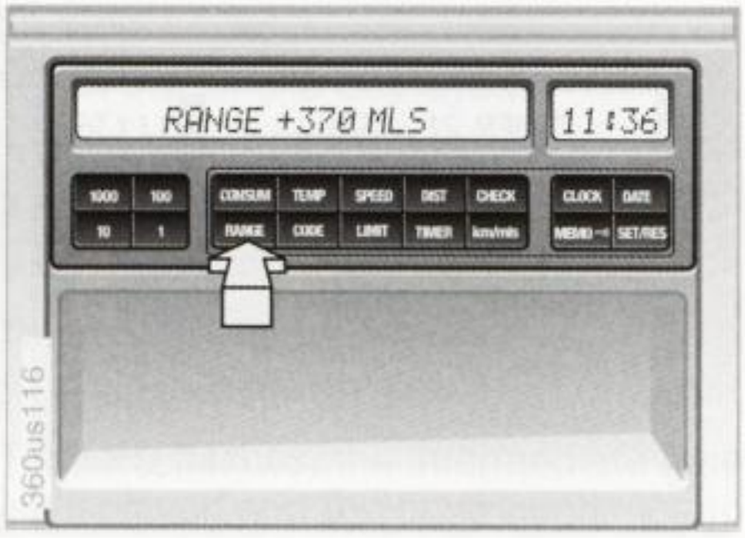

Estimated cruising range

Displays the estimated travel range based on the remaining fuel. The value takes into account the way in which way the car has been driven.

Data request: press RANGE key.

A plus symbol (+) in front of the value indicates that the cruising range is still being corrected (measuring tolerance).

If three segments flash in the display, the cruising range is less than 9 miles (15 km) and the car should be refueled as soon as possible.

When you refuel, the onboard computer registers the action only

- if the fuel amount is over 1.2 gallons (approx. 4 liters).
- the engine is switched off.

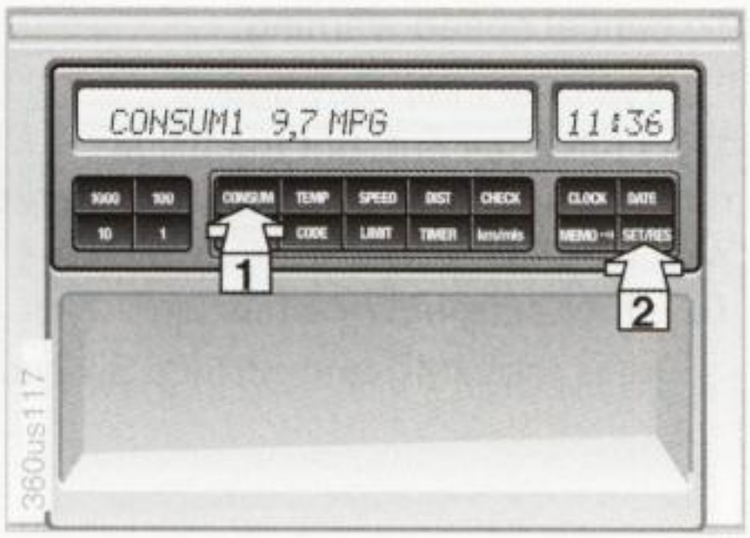

Average fuel consumption

The computer can calculate average fuel consumption rates simultaneously for two distances, e.g., for an entire journey and for a single section of it.

To start calculations for distance 1:

Key sequence as in illustration.

To start calculations for distance 2:

Repeat key sequence as in illustration.

Data request: press CONSUM key.

Press the key repeatedly to switch between the average consumption of the 1st and 2nd section of the journey. At the same time, the display also indicates which consumption (1 or 2) is currently indicated.

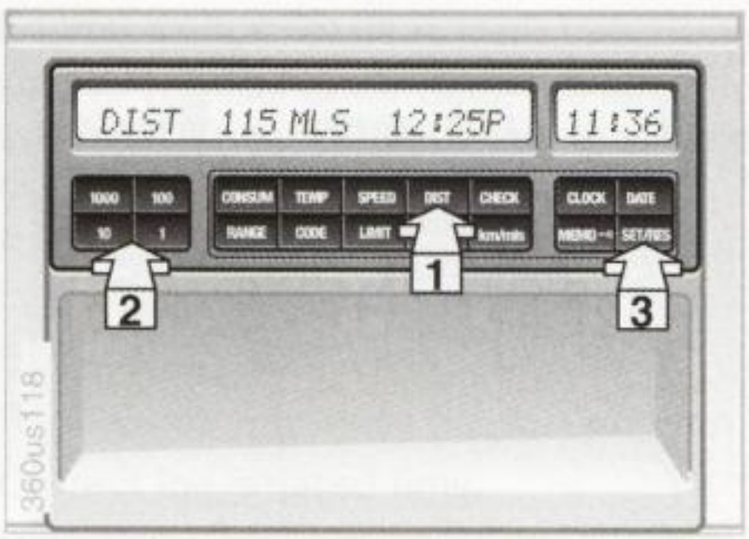

Distance remaining to destination

Displays the distance to the destination. Available only if the total distance was entered before the start of the journey.

Enter the distance:

Key sequence as in illustration.

Data request: press DIST key.

At the same time, the estimated time of arrival is displayed, which is continuously calculated in accordance with the driving style.

Any additional mileage extending beyond the total defined in the initial entry is indicated by a minus sign.

To change scale:

Press the km/mls key once

- to change the distance

or twice to also

- change the arrival time.

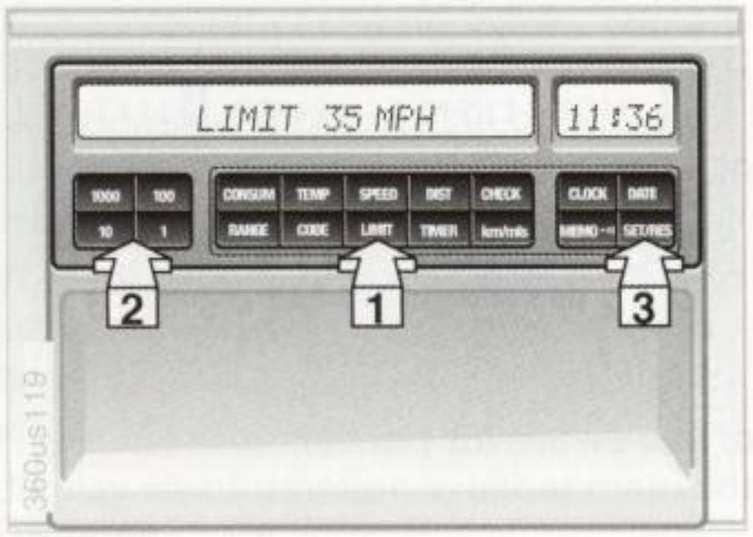

Speed limit warning (limit)

You are alerted when you exceed the maximum speed that you entered earlier (e.g., posted speed limit). An acoustic signal sounds, the corresponding LED flashes and the stored limit briefly appears in the display.

Vehicle speed must drop back to at least 3 mph (5 km/h) below the programmed speed to reset the system for repeat warnings.

To enter the speed warning threshold:

Key sequence as in illustration. The LED lights up.

To cancel speed warning:

▷ Press the LIMIT key again.

The LED goes out, but the value remains stored and can be reactivated with the LIMIT key.

To adopt current speed as limit:

▷ Press the LIMIT and SET/RES keys.

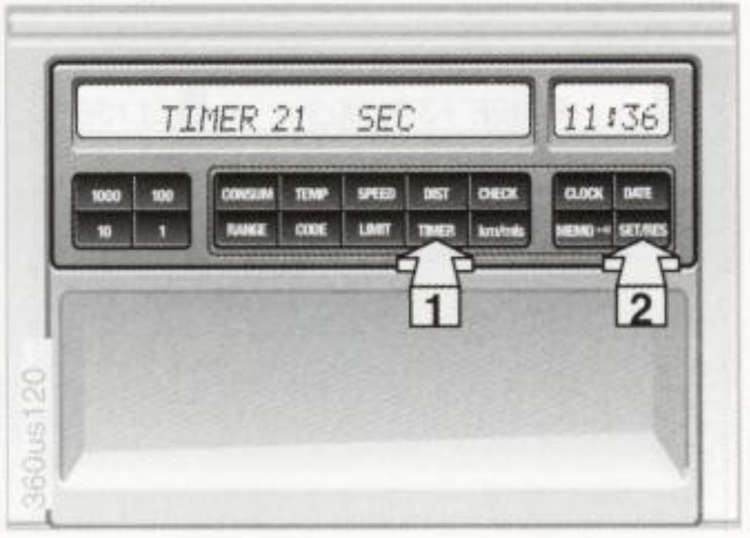

Timer*

The timer can be used only on vehicles without independent ventilation. The running time ranges up to 99 hours and 59 minutes. The time is shown in the display: first in seconds and tenths of a second, after a minute in minutes and seconds and after an hour in hours and minutes.

To start:

Key sequence as in illustration.

The LED lights up and the time runs in the display.

Onboard computer*

To stop:

When the time is displayed:

▷ Press the SET/RES key.

If other information is displayed:

▷ Key sequence as in illustration.

Take intermediate time:

▷ Press the TIMER key.

The LED flashes, the intermediate time is displayed and the timer continues to run.

Display time again:

▷ Press the TIMER key again.

▷ The timer stops with the ignition key in position 0 and runs again in position 1.◀

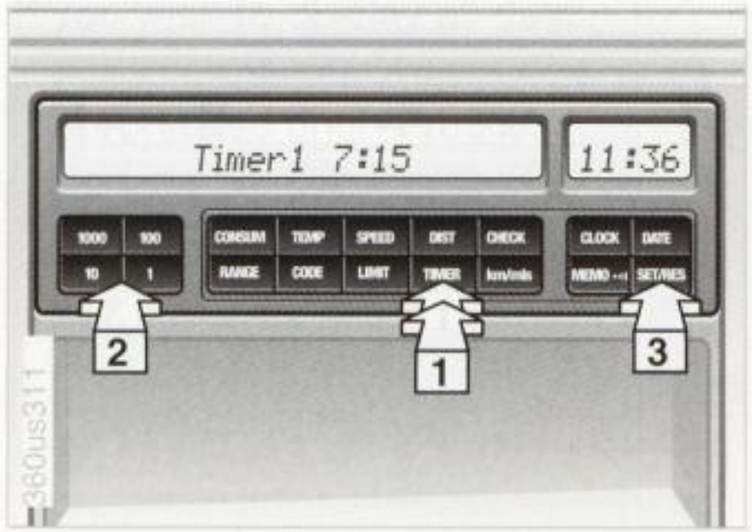

Independent ventilation*

To enter activation times

You can select two starting times for independent ventilation. After 30 minutes the ventilation shuts off again automatically.

Refer to page 71 for important information on using the independent ventilation system.

When you press the TIMER key, the current status of the ventilation appears in the display.

Enter a switch-on time:

Before you can enter data, the ignition key must be at position 1 and the digital clock must be visible in the display.

Repeat key sequence as in the illustration. (Press the TIMER key twice).

Enter the second switch-on time:

Repeat key sequence as in illustration.

Correct the entered time:

Repeat the key sequence as shown in the illustration, but enter a different time.

After you enter the time an asterisk * appears in the display and the LED lights up, so that you can ascertain that a switch-on time has been selected.

During ventilation, the LED blinks. It goes off when you turn the switch off.

Request a previously selected time (LED lights up):

▷ For the first switch-on time, press the TIMER key twice.

▷ For the second switch-on time, press the TIMER key three times.

Onboard computer*

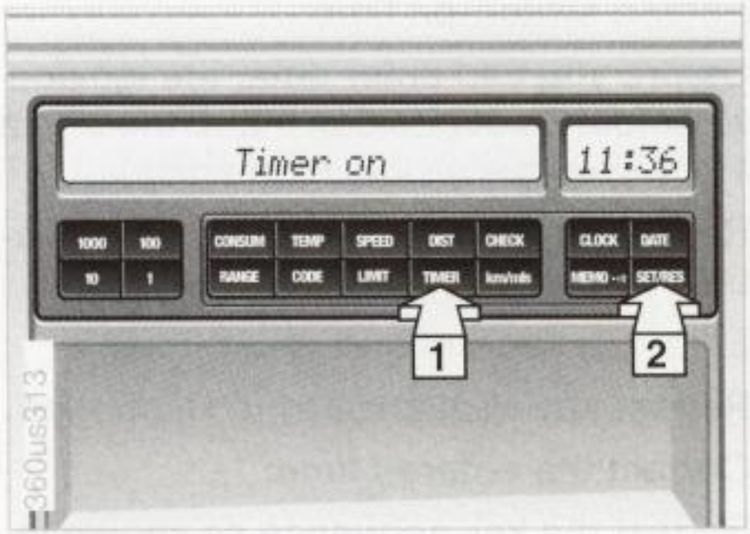

Switch on directly

Available only with ignition key at position 1.

Key sequence as in illustration.

Switch off directly

In ignition key position 1: key sequence as in the illustration.

In ignition key position 0: press only the key SET/RES.

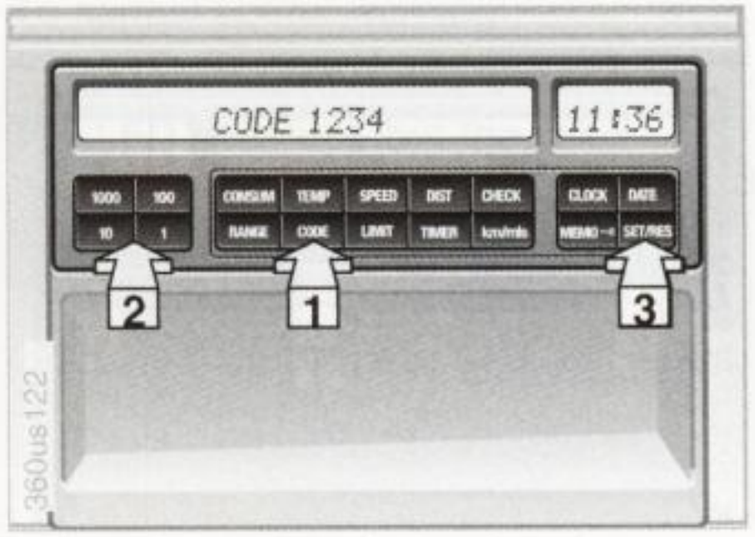

Enter code

In addition to electronic vehicle immobilization (refer to page 26), you can attain further engine immobilization or protection against tampering by entering a code into the onboard computer.

Engine-start attempts are monitored.

A code number is used to arm the system. The code is then required for subsequent starting attempts. Always remember the code number.

To set (ignition key in position 1):

Press the keys in the sequence illustrated and then turn the ignition key into position 0 or remove the key.

Code numbers from "0000" to "9999" can be entered. (You will have to re-enter the code each time you activate the system).

The LED lights up for up to 36 hours with the ignition key in position 0 or with the key removed. If the LED blinks for approx. 10 seconds, the engine hood is not closed or the radio has been removed. If the LED flashes for 10 seconds the engine hood has not been closed or the radio has been removed.

To cancel with ignition key in position 1 or 2:

A gong and the display "---- code" request you to enter a code.

- Use entry keys to enter the code number
- Press the SET/RES key
- Start the engine.

The system responds to attempts to start the vehicle using an incorrect code or no code at all by preventing the engine from starting.

Onboard computer*

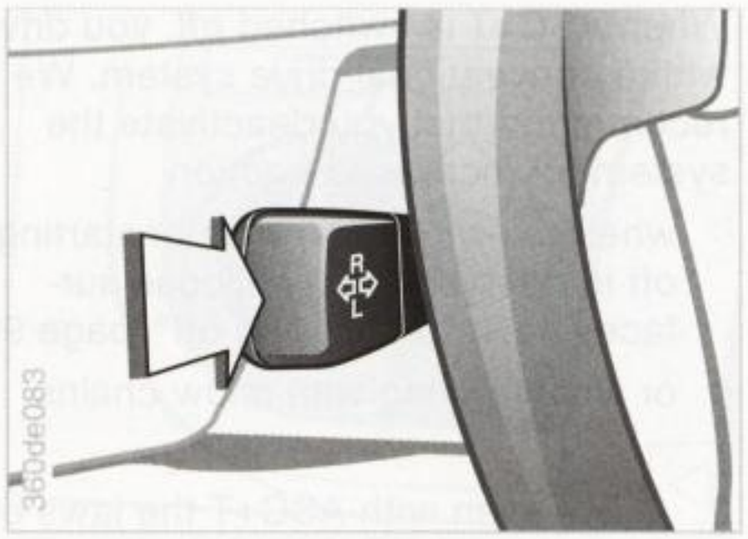

Remote control

You can use the turn signal lever to select various display sequences for computer data following entry.

To enter:

- ▷ Keep the turn signal lever depressed until "Prog 1" appears in the display.
- ▷ Press the keys in the sequence in which you want the information to be displayed.
  Each time you store data, the program number in the display changes.
- ▷ Press the SET/RES key.

If you wish to display all data:

- ▷ Keep the direction indicator depressed until "Prog 1" appears in the display.
- ▷ Press the SET/RES key.

▷ For average fuel consumption 1 and 2 and for the activation times 1 and 2 for the parked-car ventilation system, please note the following: If e.g., both consumptions are to be displayed, the CONSUM key must be pressed twice. If, e.g., only consumption 2 is to be displayed (not consumption 1), press the km/mls key after pressing the CONSUM key. (Pressing the km/mls key repeatedly switches between consumption 1 and 2 as often as desired).
Proceed in a similar manner for switch-on times 1 and 2 for the independent ventilation*.◀

Data request:

Briefly tap the turn signal lever each time.

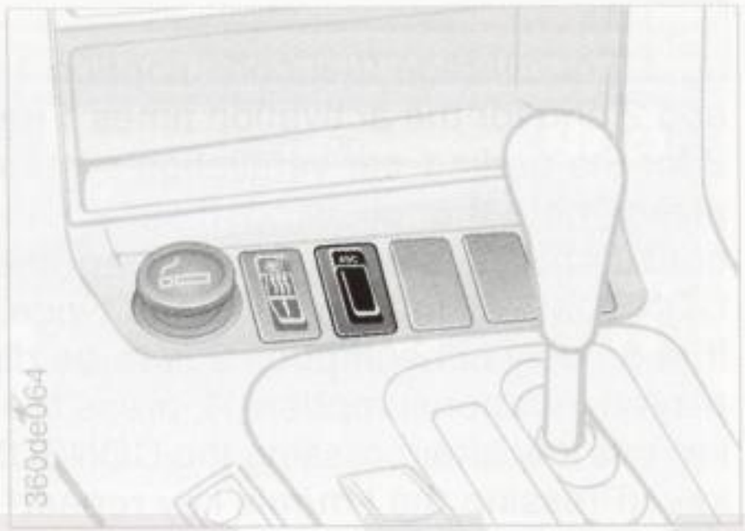

Automatic Stability Control plus Traction (ASC+T)

This system is designed to enhance operating stability, especially while accelerating and during cornering.

ASC+T automatically assumes operation each time you start the engine.

The indicator lamp in the instrument cluster goes out shortly after you switch on the ignition.

To deactivate the system

Press the button, the indicator lamp comes on.

To reactivate the system

Press the button again; the indicator lamp goes out.

Indicator lamp flashes

The system is actively regulating drive torque in response to monitored vehicle operating conditions.

Indicator lamp fails to go out after the engine is started, or comes on in the course of normal vehicle operation

The system has a defect. The vehicle normally remains operational even without ASC+T. Consult your authorized BMW Retailer for repair.

When ASC+T is switched off, you drive with a conventional drive system. We recommend that you deactivate the system for increased traction

- when rocking the vehicle or starting off in deep snow or on loose surfaces (refer to "Starting off", page 90)
- or when driving with snow chains.

But even with ASC+T the laws of physics can not be suspended. Any consequences arising from traction loss due to excessive vehicle speed remain the responsibility of the driver. We therefore urge you to avoid using the additional safety margin of the system as an excuse for taking risks.◀

For more details on ASC+T, refer to section "Advanced Technology", page 134.

Parking lamps/low beams

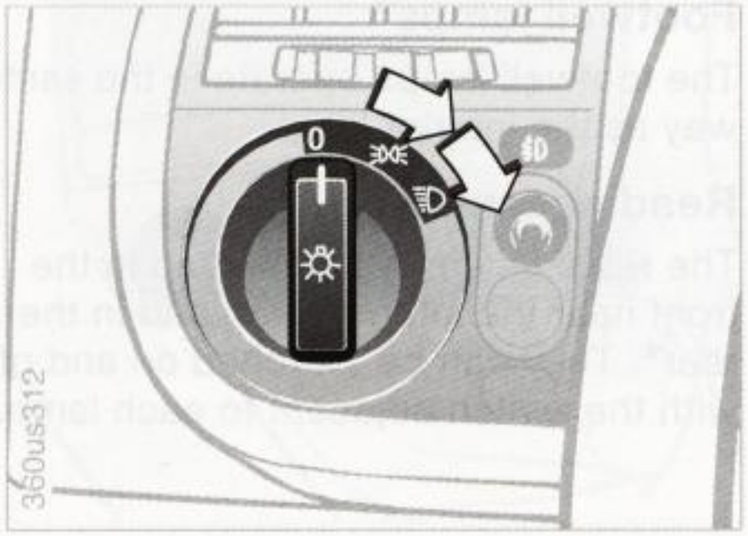

Parking lamp

Low beams

When you switch off the ignition without turning off the headlamps, only the parking lamps stay on. When you return the ignition key to position 0, a buzzer sounds for a few seconds to remind you that the lamps have been left on.

LIGHTS ON warning

When you turn the ignition key to 0, a buzzer goes off for a few seconds after the driver's door has been opened to remind you that the lamps are not turned off.

On vehicles with alphanumeric Check Control*:
The reminder occurs via the Check Control, refer to page 55.

Daytime-running lamps switch*

If desired, the lighting switch can be left in the second position: when the ignition is switched off, the external lighting is also switched off.

On vehicles with daytime running feature, the lamps come on whenever the ignition key is turned to position 2 with the headlamp switch remaining at 0.

Instrument lighting

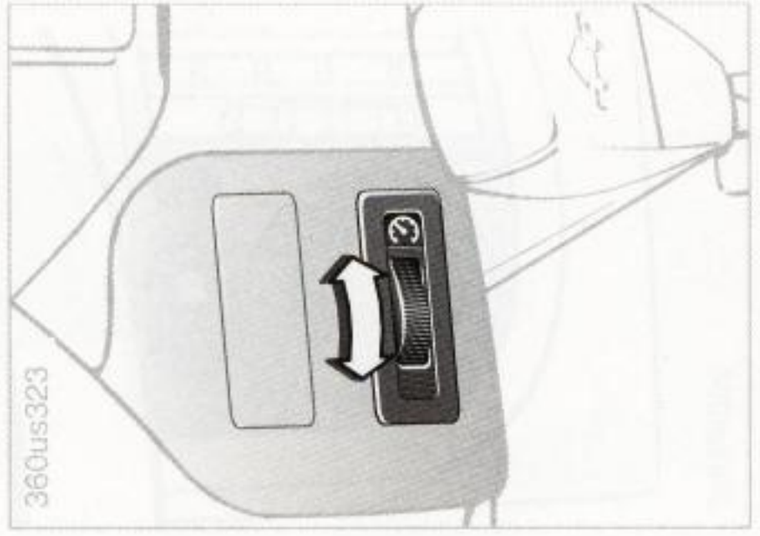

Adjust the illumination intensity by turning the rotary control.

Foglamps

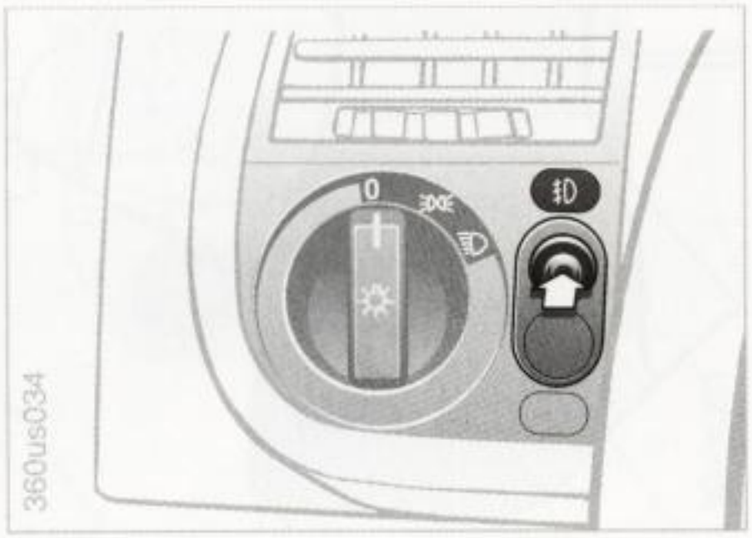

Foglamps

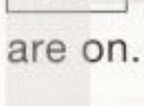

A green indicator lamp lights up in the instrument cluster to indicate that the front foglamps are on.

Interior lamps

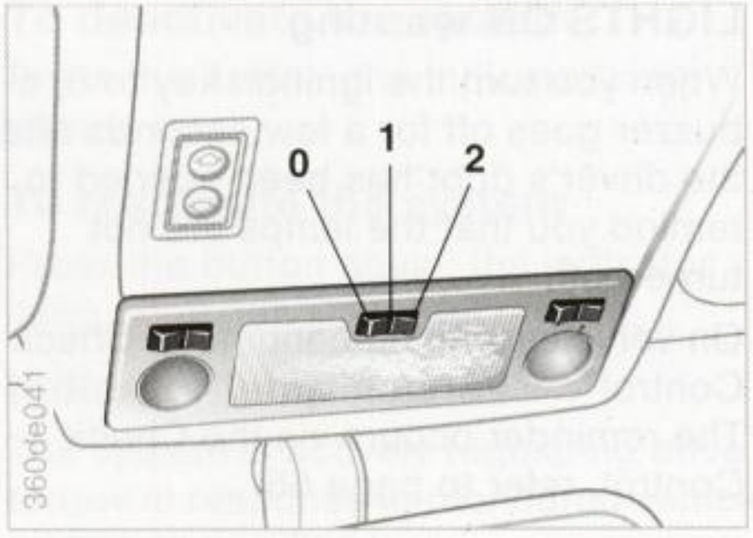

0 Continuously off.

1 Lamps on:

▷ With door open (switching via door contact).

▷ For a few seconds after closing the door; lamps go out immediately when the ignition is switched on.

▷ After the ignition has been switched off for a few seconds, if the vehicle lighting was switched on.

▷ If your car is equipped with the driver's door lock heating option, when the driver's door handle is lifted for a few seconds with the vehicle closed (possible a maximum of three times).

▷ Following an accident.

2 Continuously on.

Footwell lamps*

The footwell lamps operate in the same way as the interior lamp.

Reading lamps*

The reading lamps are located in the front near the interior lamp and in the rear*. They can be switched on and off with the switch adjacent to each lamp.

Seat heating*

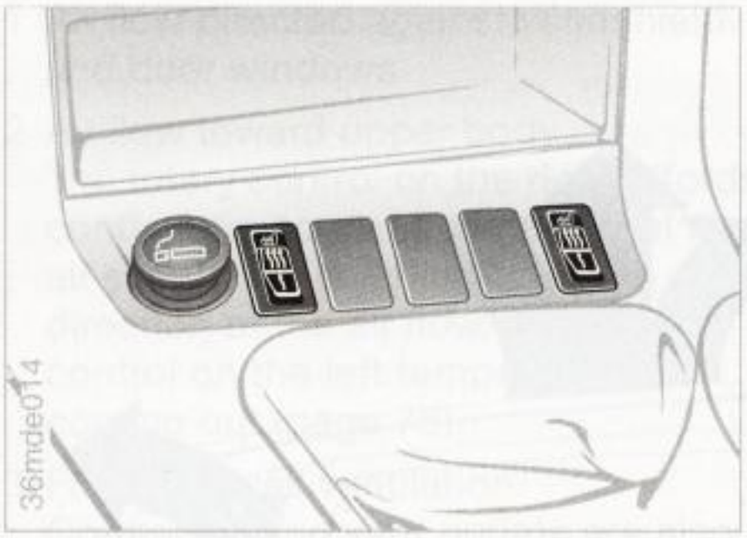

The seat cushion and backrest can be heated at ignition key position 2.

Press the switches with the heating symbols:

Rapid heat-up as long as the switch lights up brightly. Automatic changeover to regular heating.

Heating as long as the switch lights up brightly. The heater switches off automatically.

To switch over while heating: press the dimly lit switch.

To switch off prematurely: press the brightly lit switch.

Independent ventilation*

This ventilates the vehicle's interior and lowers its temperature using the heater or the air conditioner fan.

The system is operated by the onboard computer, refer to page 65.

You can set the time for the system to start; it will remain active for 30 minutes. You can also turn it on and off directly.

As the system uses a substantial amount of electric current, you should refrain from activating it twice in succession without allowing the battery to be recharged in normal operation between use.

The independent ventilation is available for use when the outside temperature is above 60 °F (16 °C), but not when driving.

The air comes out through the vents for the upper body area. The vents must therefore be open for the system to operate.

Automatic climate control*

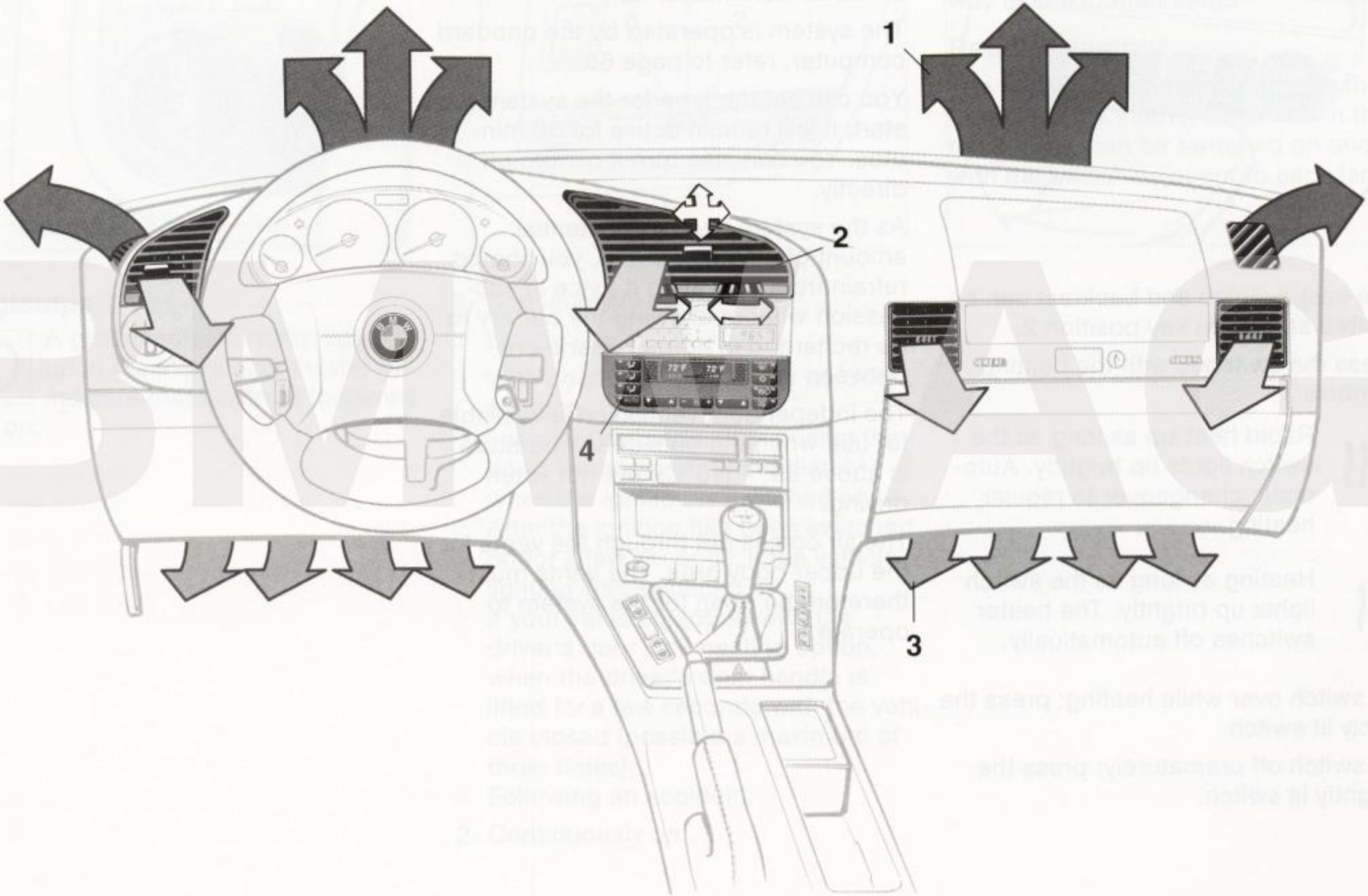

36mus311

Automatic climate control*

1 Air flow directed against windshield and door windows

2 Air flow toward upper body
The rotary control on the right affords continuous opening or closing of the air supply, the lever changes the direction of the air flow. The rotary control on the left tempers the air coming out (page 76).

3 Front footwell ventilation
Corresponding vent outlets are also located in the rear footwell.

4 Controls

Automatic climate control*

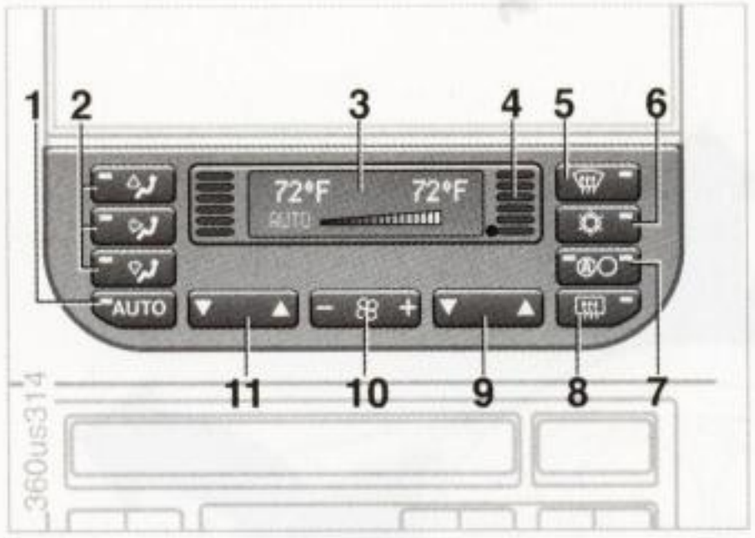

Controls

1 Automatic air distribution
2 Individual air distribution
3 Temperature and air flow display
4 Air grill for interior temperature sensor - please keep clear and unobstructed
5 To defrost windshield and door windows
6 Air conditioner
7 Recirculated-air mode
8 Rear window defroster
9 Temperature control – right-hand side
10 Air supply
11 Temperature control – left-hand side

Air conditioning for comfort

Use the automatic system; switch on AUTO key 1. Select the interior temperature that is comfortable for you, e.g., 70 °F (22 °C). With exterior temperatures above 41 °F (5 °C) you can also use air-conditioning 6. This dries the air and prevents window mist when e.g., persons with damp clothing are in the vehicle. Adjust vent 2 in such a way that the air blows past you and does not strike you directly. Turn the rotary control on the left under the vents 2 for the upper body area to a middle setting, so that you will be driving in cooler air that does not tire you out.

The following description gives you additional individual settings.

Automatic air distribution

When you activate the AUTO mode, the program takes over the setting of the air distribution and the air supply and, in addition, adjusts your temperature pre-selections to exterior conditions (summer, winter). This program maintains a comfortable in-car climate regardless of the season. Select the interior temperature that is comfortable for you, e.g., 70 °F (22 °C). The temperature pre-selections as well as the lettering AUTO for the air supply appear in indicator 3.
Open the vent outlets for the upper body area. Switch on the air conditioner in warm weather.
The maximum cooling capacity is achieved when you set the rotary control 3 (refer to page 76) to cold.

Individual air distribution

You can cancel the automatic program by selecting distribution patterns to suit your individual requirements. You can direct air toward the windshield and windows, toward the upper body and/or into the footwell.

Automatic climate control*

To defrost windshield and door windows

This program is designed for rapid removal of ice and condensation from the windshield and side windows.

Air conditioner

The air conditioner cools and dehumidifies incoming air before reheating it to the selected temperature.
Depending on the weather, the windshield may fog over briefly when the engine is started.
Switching off the air conditioner at outside temperatures below approx. 41 °F (5 °C) will prevent the windows from fogging up.
Frequently switching the air conditioner on and off may also promote the formation of condensation on the window surfaces.

Condensation forms in the air conditioner system during operation, which then exits under the vehicle. It is not unusual for a small puddle to form there.◀

Circulated air mode/Automatic recirculated air control (AUC)*

You can respond to unpleasant odors in the outside air by temporarily excluding the outside air. The system then recirculates the air currently within the vehicle.

Press the button repeatedly to run through the following control sequence:

- Indicator lamps off: outside air flow operational.
- Left-hand indicator lamp on – AUC mode: the system detects pollutants in the outside air and responds by deactivating the outside air flow as required. The system then recirculates the air currently within the vehicle.
- Right-hand indicator lamp on: the flow of outside air into the vehicle is permanently blocked. The system then recirculates the air currently within the vehicle.

If the windshields fog over in circulated air mode, switch off the circulated air mode/Automatic recirculated air control and increase the air supply if necessary.◀

Rear window defroster

The indicator lamp comes on to confirm that the rear window defroster is operating.
The defroster switches off automatically after approx. 15 minutes.

Temperature

On both the driver's and the passenger's side you can adjust the specific temperature. The figures in the display provide a general indication of interior temperature. We recommend 70 °F (22 °C) as a standard setting for comfortable travel, both with and without the air conditioner. When you start the vehicle, the system ensures that the selected temperature is achieved as quickly as possible and maintained at a constant level by the control.

Automatic climate control*

Air supply

In the AUTO mode, the air supply is controlled automatically and AUTO appears in display 3, refer to the summary on page 74. Using "+" and "–" you can vary the air flow. Your setting is indicated by bars, the automatic control is switched off. You can reactivate it by pressing the AUTO key.

When you press "–" during operation at minimum blower speed all displays are canceled: the fan, heating and air conditioner are switched off, the air supply is blocked. By pressing on any key of the air conditioning you can again engage the system.
Effective heating and cooling is ensured at a medium blower speed.

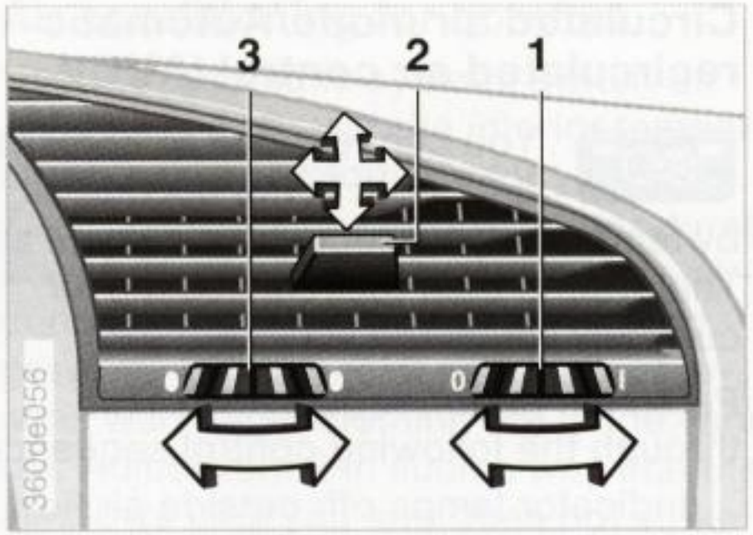

Draft-free ventilation

You can adjust the vent outlets for the upper body area to select the optimum airflow rates and directions for your own personal requirements:
Use rotary control **1** to open and close the vents throughout and infinitely-variable range. Use the levers **2** to adjust the direction of the air flow.
The rotary control **3** allows you to mix the air from the outlets for your upper body by warming or cooling it as desired:
Turn toward blue – colder
Turn toward red – warmer

Microfilter

The microfilter removes dust and pollen from the incoming air. The filter is changed by your BMW Retailer when you bring your vehicle for maintenance. A substantial reduction in air flow indicates that the filter needs to be replaced prematurely.

BMW Hi-Fi System*

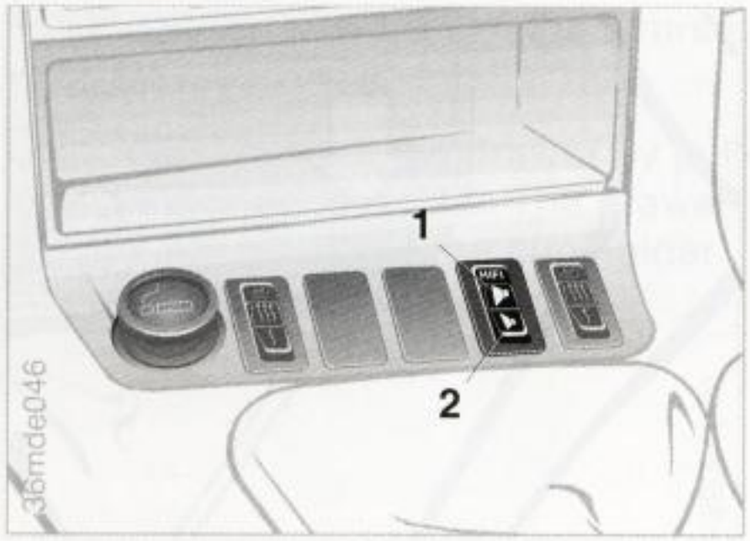

BMW Hi-Fi System (Harman/ Kardon)

1 On

2 Off

In the "On" position, the listener is given the impression of a considerably larger passenger compartment with an improved stereo effect in all seats.

This function should be switched off in the case of poor radio reception due to the frequent changes between stereo and mono which result.

Glove compartment

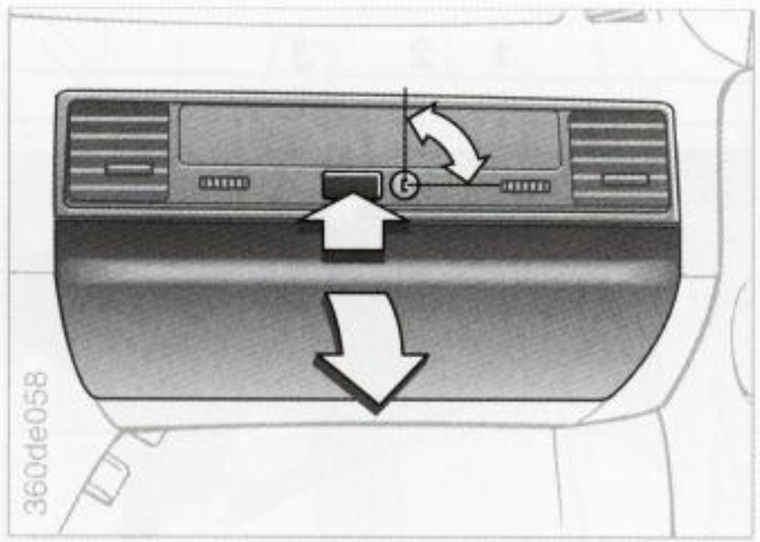

To open

Press the button and fold down the door.

The glove compartment lamp switches on from ignition key position 1.

To close

Fold up door.

To engage locks

Only possible with a master key.

⚠ To avoid the risk of injury, close the glove compartment immediately when you are finished using it.◀

Rechargeable flashlight*

The connection* for the rechargeable flashlight is located on the left side of the glove compartment.

The flashlight features overcharging protection, so it can be left in its holder continuously.

However, it must be removed when the battery is disconnected or removed.

⚠ Ensure that the flashlight is switched off before inserting it in its holder.◀

Ashtray*

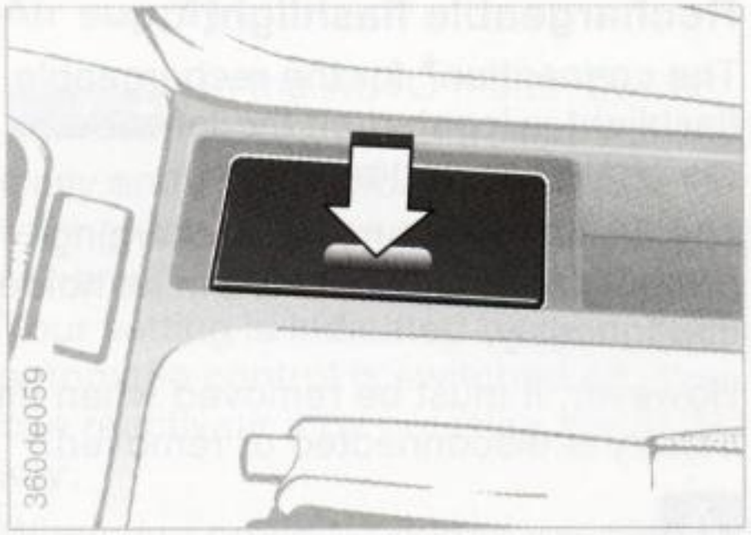

To open

Press against the recess (arrow).

To extinguish a cigarette, tap off the ash and gently press the tip into the funnel.

To empty

Press on the edge of the lid with the ashtray open: the ashtray insert pops up and can be removed.

The rear ashtray is operated in the same manner.

Coin box, cup holder

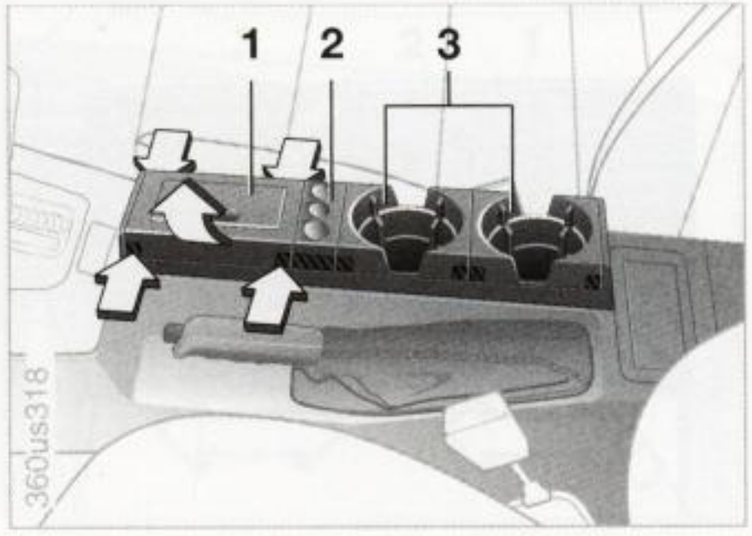

The components ashtray (1), coin box (2) and the two cup holders (3) can be arranged as you wish.

Simultaneously press lightly on the ribbed surfaces (arrows) of the desired components and pull them upward.

Replace the components in the bracket in the desired arrangement and clip into place.

Cigarette lighter*

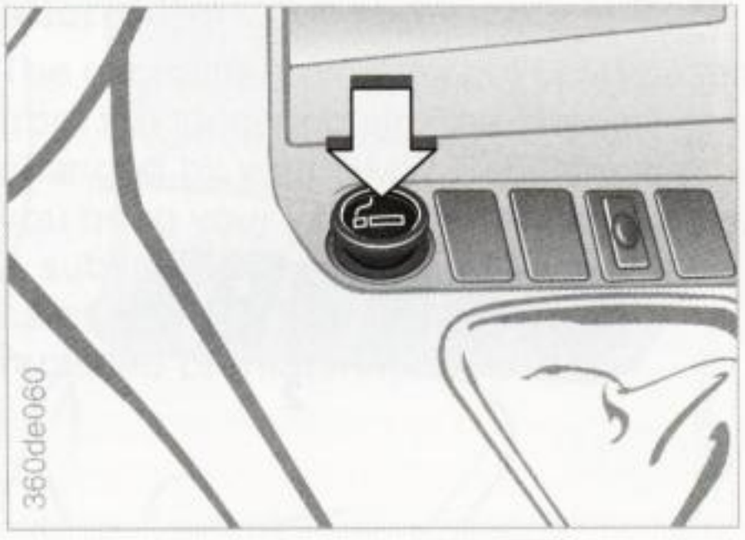

Press in. Remove as soon as the lighter jumps back out.

Always hold the hot lighter by its plastic knob, as otherwise serious burns could result.

The cigarette lighter remains operational when the ignition key has been removed. For this reason, children should never be left in the car unattended.◀

Cigarette lighter socket

Suitable for attaching power supplies to flashlights, car vacuum cleaners, etc., up to a rating of approximately 200 watts at 12 volts.

Inserting plugs of a different shape or size may damage the socket.

Center armrest (rear)*

Pull the strap to fold down the armrest.

To open drawer*:

Unlock and pull out the drawer by pulling on the drawer handle. The drawer locks in any position. The cup holder can be shifted as necessary.

Through-loading system*

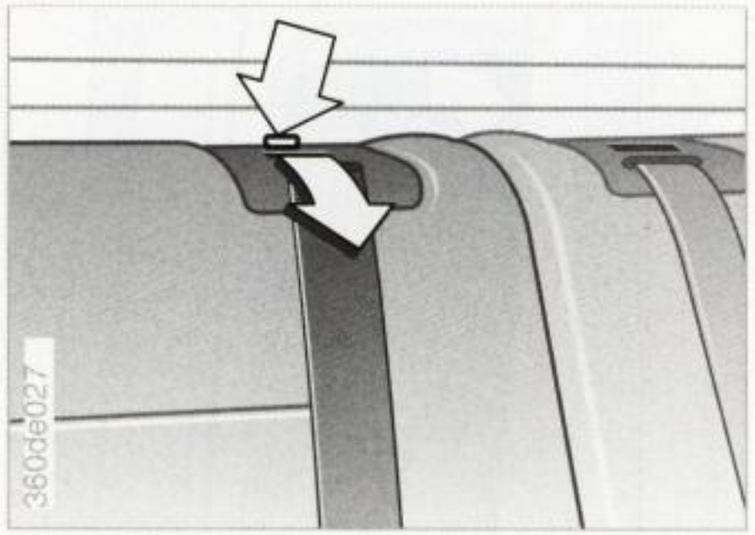

The rear backrest is divided in the center. Each side can be folded down separately to load long objects.

To release:
Reach into the handle recess, press down and pull forward.

When folding back the rear backrest, make sure that the locking device is properly engaged to ensure proper operation of the safety belt. The red slide must move downward.

If the rear backrest is not locked, the safety belt can not be pulled out.

Ski bag*

It is designed for safe, convenient transport of 3 to 4 pairs of skis.

The length of the ski bag in combination with the additional space in the luggage compartment makes it possible to transport skis of up to 6.8 ft. (2.10 m) in length. Because the ski bag contracts as additional skis are inserted, the bag is suitable for transporting only two pairs of skis when both are a maximum of 6.8 ft. (2.10 m) long.

If the ski bag is not used for longer periods, it should be stored in a dry place.

It is advisable to wipe off any water which has collected on the waterproof ski bag from time to time.

⚠ The ski bag must not hinder the driver during driving.◀

Ski bag*

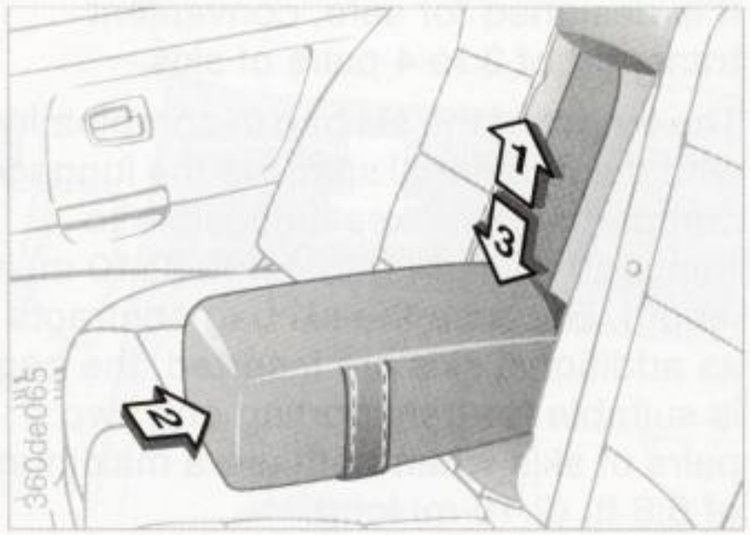

M3 Sedan – loading the ski bag

Fold down the center armrest. Detach from the mounts (1) with one hand, press slightly toward the rear with the other hand (2) and remove upward.

Detach the Velcro® strip at the top of the cut-out trim and lay it on the seat.

When reinstalling the center armrest, guide it into position from above, then apply downward pressure until you hear it snap into position (3).◀

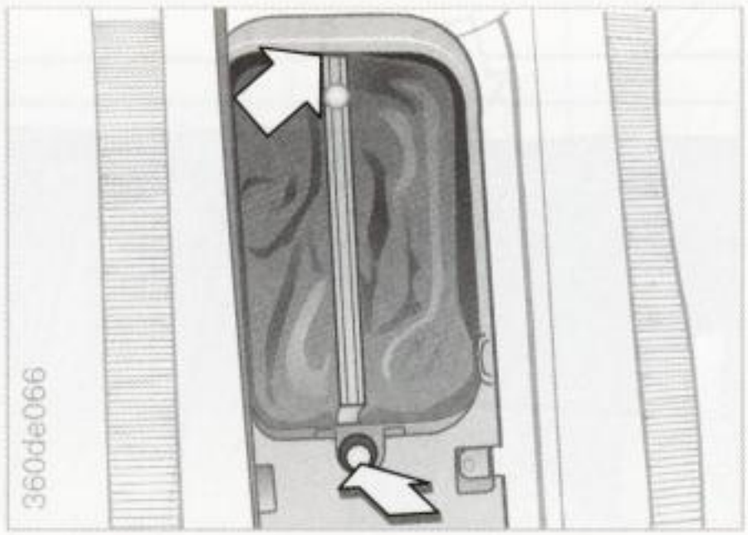

Press the round button to unlock the cover panel in the luggage compartment.

Then unhook the retaining strap at the top and fold it down.

Extend the ski bag between the front seats. The zipper provides convenient access to the inside of the bag, and can also be left open to promote drying.

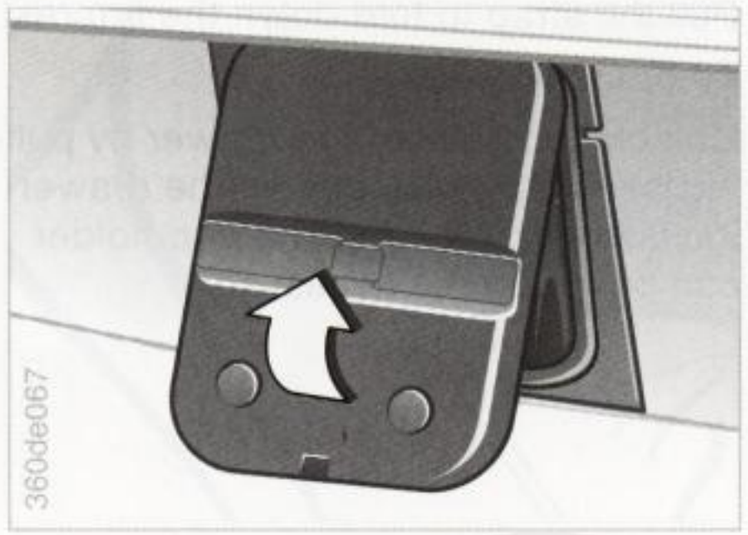

Use the magnetic retainers to attach the cover panel to the lower side of the rear shelf within the luggage compartment.

Please ensure that the skis are clean before loading them into the bag. Take care to avoid damage from sharp edges.

For general information on the ski bag, refer to page 79.

Cargo loading

Stowing a load

If you are transporting a load in your BMW:

- Stow a heavy load as far forward as possible - directly behind the backrests or the front wall of the luggage compartment - and on the floor.
- Cover sharp edges and corners.
- Do not pile objects higher than the top edge of the backrest.
- If the load is heavy and the rear seat is unoccupied, put the outer safety belt in its lock.

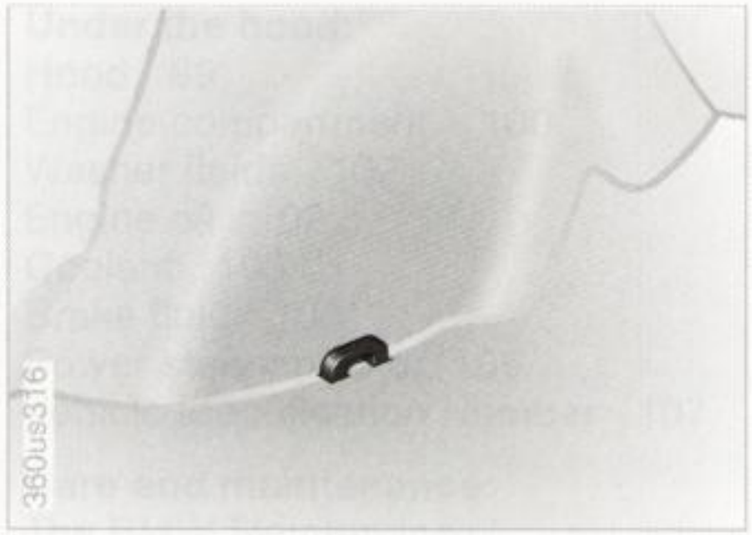

Securing load

- Secure smaller, lighter items with retaining straps or draw straps (refer to page 30).
- For large, heavy items, see your BMW Retailer for load-securing devices*. The lashing eyes on the corners of the luggage compartment or luggage space are used to attach these straps.
- Observe the information enclosed with the load-securing devices.

Always position and secure the load correctly, otherwise it can endanger the passengers in the event of braking or swerving.
Do not exceed the permissible gross weight and axle load (refer to page 139), otherwise the operating reliability of the vehicle is compromised and does not comply with traffic laws.
Do not stow heavy or hard objects in the passenger compartment, otherwise they would be thrown around during braking and evasive maneuvers and endanger the occupants.◀

BMW AG

Special operating instructions:
Break-in procedures 84
Driving notes 84
Catalytic converter 86
Antilock Brake System ABS 87
Disc brakes 88
Multi-disc self-locking differential 89
Brake system 89
Winter driving 90
Roof-mounted luggage rack 91
Radio reception 92
Cellular phones 92
Technical modifications to the vehicle 93

Wheels and tires:
Tire inflation pressures 94
Tire tread 94
Tire replacement 95
Interaxle tire changes 95
The right choice 96
Winter tires 97
Approved wheels and tires 98

Under the hood:
Hood 99
Engine compartment 100
Washer fluids 102
Engine oil 102
Coolant 105
Brake fluid 106
Power steering fluid 106
Vehicle Identification Number 107

Care and maintenance:
The BMW Maintenance System 108
Caring for your car 109
Vehicle storage 115

BMW AG

Break-in procedures

To ensure that your vehicle provides maximum economy throughout a long service life, we request that you observe the following:

Engine and differential

Up to 1,250 miles (2,000 km):

Max. engine speed 5,500 rpm
Max. road speed 105 mph (170 km/h), only where allowed

Always avoid the wide-open throttle position of the accelerator pedal.

Up to 3,000 miles (5,000 km):

Max. continuous vehicle speed 135 mph (220 km/h), only where allowed. Only drive at top speed for short periods.

You should also observe these break-in procedures if the engine or differential is replaced later in the course of the vehicle service life.

Tires

Due to technical factors associated with their manufacture, tires do not achieve their full traction potential until an initial break-in period has elapsed. This means that you should drive with additional caution for the first 200 miles (300 km).

Brake system

Brake pads and disks attain their optimal wear patterns only after approx. 300 miles (500 km).

Driving notes

Engine

Do not allow the engine to warm to its normal operating temperature by leaving it idling with the vehicle parked.

However, when starting in extremely cold weather it is a good idea to allow the engine to run at fast idle for about 30 seconds before getting underway; this precaution ensures adequate lubrication.

Avoid high engine speeds while the engine is still cold; this helps avoid premature wear and reduced service life.

When driving under high engine loads (acceleration, steep hills), try to keep the engine running above 1,500 rpm.

We recommend downshifting into a more suitable range, especially when driving up extended inclines.

It is a good idea to follow extended periods of low-speed operation (dense urban traffic, stop-and-go driving) by maintaining an engine speed consistently above 3,000 rpm for several miles. This procedure helps prevent deposits from accumulating in the engine.

Clutch

Depress the clutch throughout its complete travel range to shift gears. Do not "ride" the clutch by driving with your foot resting against the pedal.

⚠ Brakes:
Do not drive with your foot resting on the brake pedal. Even light but consistent pedal pressure can lead to high temperatures, brake wear and possibly even brake failure.

Aquaplaning:
A wedge of water can form between tires and road surface when you operate the vehicle on wet or slushy roads. This phenomenon is referred to as aquaplaning, or hydroplaning, and it is characterized by a partial or complete loss of contact between the tires and the road surface. The ultimate results are loss of steering and braking control.

Water on the roads:
When driving through water (maximum depth one foot = 30 cm) always drive at walking speed, otherwise damage to the engine, the electrical system and the transmission can occur.

Rear window shelf:
Never use the rear window shelf to store heavy or bulky objects. They could pose a danger to the occupants when the car is braked heavily.

Clothes hooks:
When suspending clothing from the hooks, ensure that they will not obstruct the driver's vision. Refrain from hanging heavy objects from the hooks, as these could cause personal injury when the car is braked heavily.◀

Catalytic converter

The catalytic converter reduces harmful exhaust emissions.

It is designed for use with unleaded fuel only.
Even minute quantities of lead would be enough to permanently damage both the catalytic converter and the system's oxygen sensor.

To ensure efficient, trouble-free engine operation and avoid potential damage:

- Always have your car serviced in accordance with maintenance instructions.
- Never continue driving until the fuel tank is empty.
- Respond to engine miss by switching off the engine at once.
- Never tow-start the car unless the engine is cold, or else unburned fuel may reach the catalytic converter. Better yet: use jumper cables!
- Avoid other situations in which the fuel would not be (completely) burned, for instance:
  Frequent, extended, or repeated starting attempts during which the engine fails to start. (Switching off and restarting a healthy engine causes no damage).
  Never let the engine run with any of the spark-plug cables disconnected.

⚠ Always observe the above points to prevent unburned mixture from entering the catalytic converter. This could result in overheating, leading to serious damage.
High temperatures occur on all vehicles equipped with a catalytic converter. Heat shields are installed adjacent to some sections of the exhaust system. Never remove these shields; do not apply undercoating to their surfaces. When driving, standing at idle or parking the vehicle, take care to avoid contact between the exhaust system and flammable materials (e.g., grass, hay, leaves, etc.). Such contact could lead to a fire, resulting in personal injury and property damage.◀

Traveling abroad

Always make sure that unleaded fuel meeting your engine's octane requirements will be available when planning trips outside the country. The use of fuel failing to meet the official octane requirements could result in engine damage.

If you are considering traveling to a country in which unleaded fuel is not readily available, please remember that leaded fuel will destroy the lambda oxygen sensor and the catalytic converter on your BMW. After operation on leaded fuel, your vehicle will no longer meet American and Canadian exhaust emission standards, and there will also be a loss of fuel economy. Upon your return to the US or Canada, you will be expected to comply with legal ordinances requiring that you replace both the oxygen sensor and the catalytic converter, and to have the fuel system flushed to remove any traces of leaded fuel.

Antilock Brake System (ABS)

ABS enhances active safety by helping to prevent the wheels from locking under braking. When the front wheels slide, the driver loses steering control over the vehicle. Traction loss at the rear wheels can cause the rear end to break into uncontrolled oversteer.

ABS is designed to meet two essential requirements during every application:

- to help provide vehicle stability on all types of road surface (asphalt, cement, dirt, moisture, snow and ice)
- to help to retain steering and maneuvering capability under the same conditions.

However, certain important considerations must be borne in mind in connection with these requirements:
Not even ABS can suspend the normal laws of physics. ABS alone can not prevent accidents when the brakes are applied without an adequate safety interval between vehicles, when the car reaches excessive rates of lateral acceleration in curves, or if aquaplaning occurs. Responsibility for these types of situations remains in the hands (and feet) of the driver. You should never allow the added safety of ABS to lull you into a false sense of security, or mislead you into taking increased risks that could affect your own safety and that of others.

Driving with ABS

The yellow ABS warning in the instrument cluster goes out as soon as the engine is started.

The system becomes operative once the vehicle exceeds a speed of 5 mph (8 km/h). The ABS is deactivated whenever the vehicle's speed drops below approx. 2 mph (3 km/h). This means that the wheels can lock in the final phase of a braking action - a factor of no significance in actual practice.

The ABS system closed-loop control circuit cycles in fractions of a second. A pulsation at the brake pedal indicates to the driver that ABS is active, that is, that the car is within its maximum braking range. In addition, the audible pulsation that accompanies the control operation calls your attention to the reduced traction between tires and road surface (marginal adhesion), and reminds you that the vehicle's speed should be reduced to adapt to road conditions.

On road surfaces featuring a loose top layer on a firmer substratum, e.g., on gravel or snow, the braking distances with ABS may be longer than with the wheels locked. The same applies when snow chains are fitted. However, ABS continues to provide enhanced vehicle and steering control under these conditions.

⚠ To ensure that the system remains completely operational, never modify the ABS. Service procedures on ABS are to be performed by authorized technicians only.◀

ABS may fail to function with maximum efficiency when tires of different sizes are mounted (e.g., winter tires/spare tire; remount the correct tires at all wheels as soon as possible).

In the event of a fault, the ABS warning lamp in the instrument cluster lights up, refer to page 18. The braking system then operates as on a vehicle without ABS. However, have the brake system checked by your BMW Retailer as soon as possible. To prevent undetected defects and cumulative faults from adversely affecting the brake system, refer any problems to your authorized BMW Retailer at the earliest opportunity.

Disc brakes

Disc brakes furnish optimum deceleration and braking control as well as greater fade resistance under heavy use.

Limited vehicle use, extended periods with the car parked or in storage and light loading will increase the tendency for corrosion to form on the rotors, and dirt to accumulate on the pads. This happens because the minimum pressure between the pad and the disc required for the self-cleaning function of the disc brakes is not achieved.

If the brake rotors are corroded, they will tend to respond to braking with a pulsating effect which even extended application will fail to cure.

Use only original BMW-approved brake pads, as otherwise the vehicle type approval is voided.◄

Driving notes

While driving in wet conditions and in heavy rain, it is a good idea to apply light pressure to the brake pedal every few miles - Watch traffic conditions to ensure that this maneuver does not endanger other road users. The heat generated in this braking process helps dry the brake pads and rotors.

Maximum braking force is obtained while the wheels continue to rotate, peaking when the wheels remain on the verge of locking without actually doing so. ABS maintains this state automatically. If the ABS fails, use the intermittent braking technique as much as possible (refer to page 90).

Extended or steep mountain descents do not reduce braking efficiency if you downshift to a gear in which minimal braking is required. (Move the selector lever to the appropriate lower range if your car is equipped with an automatic transmission).

You can continue to increase the engine's braking effect by selecting a lower gear, downshifting as far as 1st gear (or selector lever position 2 for automatic transmissions).

Should engine braking prove inadequate, you should still avoid extended, continuous braking. Instead of maintaining low to moderate pressure over an extended period of time, you should decelerate the vehicle by applying more substantial force at the pedal (watch for following traffic!) and then pausing before repeating the application. This staggered braking technique allows the brakes to cool in the intervals between active braking phases, preventing overheating and ensuring that full braking capacity remains available at all times.

Do not allow the vehicle to coast by pressing down the clutch pedal or shifting into neutral while underway. Never drive with the engine switched off. The engine provides no braking effect when the clutch is disengaged or the transmission is in neutral, and there is no power-assist for brakes and steering when the engine is not running. Never allow floor mats, carpets or other objects to protrude into the area around the accelerator, clutch and brake pedals and obstruct their movement.◄

Multi-disk limited-slip differential*

Under adverse road conditions, the drive torque may not be properly transferred to an ordinary differential, causing a wheel to spin. This spinning is mostly prevented with a self-locking differential (locking value approx. 25%).

Under actual driving conditions, this means better traction characteristics when starting and accelerating (under the described adverse road conditions) and during sporty driving on curving roads.

However, in the case of extremely dynamic driving, the vehicle tends at the same time to spin around on its vertical axis in the vehicle center of gravity on road surfaces with different adhesion characteristics. The control of this tendency to spin requires greater driver concentration than can generally be assumed for a sporty driving style.

The self-locking differential is automatically activated under actual driving conditions.

Brake system

Failure of one brake circuit

Pedal travel increases, more pressure is required at the pedal.

The remaining circuit continues to provide good braking response.

⚠ In the event of any malfunction in the brake system, consult the nearest BMW Retailer as soon as possible.◀

BMW AG

Winter driving

The onset of winter is often accompanied by rapid changes in weather. Adaptations in driving style should be accompanied by preparations on the vehicle itself to ensure that your progress through the winter remains safe and trouble-free.

Coolant

Ensure that the coolant contains the year-round 50:50 ratio of water and antifreeze with corrosion inhibitor. This mixture provides protection against freezing down to approx. -34°F (-37°C). Replace the coolant every three years.

Locks

Can be made operative again using BMW lock de-icer. This de-icer also contains lubricants.
In addition, a treatment with BMW lock cylinder grease is recommended.

Rubber seals and components

To prevent the weather-stripping from freezing, apply a spray-on rubber treatment or silicone spray to the door, hood and luggage compartment lid seals.

▷ A complete range of car-care products is available from any authorized BMW Retailer.◀

BMW snow chains*

In response to severe winter road conditions, snow chains can be mounted. They should be mounted only on winter tires 225/45 R 17 M+S, only in pairs, only on the rear wheels, and only in compliance with the manufacturer's safety guidelines. Do not exceed a maximum speed of 30 mph (50 km/h). For maximum traction, we recommend that you manually deactivate ASC+T when driving with snow chains mounted, refer to page 68.

Starting off

When driving off in deep snow or "rocking" the vehicle to free it, you should switch off ASC+T, refer to page 68.

Driving on low-traction road surfaces

Operate the accelerator pedal sensitively, avoid high engine speeds and shift up to the next-higher gear early. Shift down into the next lowest gear when approaching uphill or downhill grades. Maintain an adequate distance between yourself and the car ahead.

Brakes

Winter road conditions substantially reduce the amount of traction available between the tires and the road surface; the resulting - considerable - increases in braking distance should be continually borne in mind.

ABS prevents the wheels from locking under braking; the vehicle remains stable and sensitive to steering. Should the ABS fail, with locking wheels as a result: Reduce the pressure on the brake pedal until the wheels just start to roll again while still maintaining enough force to continue braking. Then increase the pressure, release the pressure when the wheels lock, reapply pressure, etc.
This staggered braking procedure will reduce stopping distances while helping you maintain steering control. It allows you to steer around hazards once you have reduced the pressure on the brake pedal.

Winter driving

Never downshift to exploit engine braking when driving on slippery road surfaces; it could lead to loss of rear-wheel traction and endanger vehicle control. ABS and ASC+T do not provide protection against this kind of traction loss.◄

Disengage the clutch during hard braking on road surfaces affording only poor or uneven traction.◄

Loss of lateral traction (sliding)

Release the accelerator pedal and depress the clutch pedal or push the selector lever to position N with automatic transmission. Countersteer carefully and attempt to regain control of the vehicle.

Parking

Select 1st or reverse gear. If your car is equipped with an automatic transmission, select Park. Engage the parking brake when parking on hills and inclined surfaces. To prevent frost and corrosion from locking the parking brake liners at the drum, you can dry them by gently pulling up the lever while stopping (ensure that you do not endanger following traffic).

The brake lamps do not light up when the parking brake is applied.◄

Roof rack*

A special luggage system is available as an option for your BMW. Please observe the precautions included with the installation instructions.

Because roof racks raise the center of gravity of the car when loaded, they exercise a major effect on its handling and steering response.

You should therefore always remember not to exceed the approved roof weight, the approved gross vehicle weight or the axle weights when loading the rack. For specifications refer to "Technical data" on page 139

Make sure that the load is not too heavy, and attempt to distribute it evenly. Always load the heaviest items first (on the bottom).

Make sure there is sufficient space to raise the sliding/tilt sunroof.

Roof rack*

Secure the roof luggage correctly and securely to prevent it from shifting or being lost during driving (danger to following traffic).

Drive smoothly: avoid sudden acceleration and braking maneuvers; corner gently.

The roof load increases the surface area exposed to the wind: increased fuel consumption and stress on the roof are the immediate results.

Radio reception

The reception and sound quality obtained from mobile radios varies according to a variety of factors, including the broadcast range of the transmitter and the directional orientation of the antenna.

Interference factors such as high-tension power lines, buildings and natural obstructions can all lead to unavoidable reception interference, regardless of how well the vehicle's sound system is operating.

Climatic factors such as intense solar radiation, fog, rain and snow can also interfere with reception.

Cellular telephones without official BMW approval can generate radio interference. This is noticeable e.g., as a low-pitched hum in the loudspeakers.

Please refer to the supplementary operating instructions provided with your sound system for detailed information on its use.

Cellular phones*

Mobile communications devices (mobile phones, two-way radios, etc.) not specifically designed for use in your car may trigger malfunctions in other vehicular systems. BMW can neither test nor assume responsibility for every individual product being offered on the market. We recommend that you consult your BMW Retailer before purchasing any device of this kind.

To ensure that your BMW continues to provide reliable and trouble-free operation, refrain from using a cellular telephone or other radio device with an antenna located inside the passenger compartment. The antenna should always be mounted on the outside of the vehicle.

▷ Before loading the vehicle on a train or driving it through a car-wash, remove the antenna.◀

Any BMW Service station will gladly provide information on the purpose of technical modifications to the car, the legal position and the manufacturer's recommendations. For this purpose, the Retailer requires the Vehicle Identification Number and, in some cases, also the engine number.

Light-Emitting Diodes (LEDs)

Control units, displays and other interior equipment of your vehicle have LED's behind protective lenses as a light source. These LEDs resemble conventional lasers and are classified by law as "Class 1 light-emitting diodes".

⚠ Do not remove the protective lens and avoid staring directly at the unfiltered beam for extended periods (several hours), as inflammation of the iris could result.◀

Tire inflation pressures

Information for your safety

The factory-approved radial tires have been selected to provide optimum safety and driving comfort on your vehicle.

In a very real sense, both tire life and your own safety are riding on correct tire specifications and inflation pressures.

Incorrect inflation pressures are a frequent cause of tire damage. To a great extent it also influences the ability of your BMW to hold the road.

⚠ Check the tire pressures – also in the spare tire – at least every two weeks, and before every extended trip.
Incorrect inflation pressures can also lead to tire damage and accidents.◀

Tire tread

Tire tread - tire damage

Inspect your tires frequently for tread wear, signs of damage and for foreign objects lodged in the tread. Check the tread depth.

The tread depth should not be less than 0.12 in. (3 mm). Otherwise there is an increased risk of aquaplaning, even at relatively moderate speeds and with only small amounts of water on the road.

We recommend that you always replace the tires once the tread wears to 0.12 in. (3 mm). Once the tread has worn to 0.063 in. (1.6 mm), tread depth indicators appear.

⚠ Never continue driving on a deflated (flat) tire. A flat tire greatly impairs steering and braking response, and can lead to complete loss of control over the vehicle.
Avoid overloading the vehicle so that the permitted load on the tires is not exceeded. This can cause overheating and gradual internal damage. The ultimate result can assume the form of a sudden air loss.

Unusual vibrations encountered during normal vehicle operation can indicate tire failure or some other vehicle defect, as can variations in normal vehicle response, such as a pronounced tendency to pull to the left or right. Should this occur, you should respond by immediately reducing your speed and carefully proceeding to the nearest BMW Retailer or professional tire center, or having the vehicle towed in to have it and its tires inspected.
Tire damage (up to and including blowouts) can endanger the lives of both the vehicle occupants and other road users.◀

Tire replacement

To maintain good handling and vehicle response, use only tires of a single tread configuration from a single manufacturer.

⚠ Do not use retreaded tires, as otherwise driving safety may be impaired. This is due to the possible variations in casing structures and, in some cases, to their extreme age, which can lead to a decrease in their durability.◀

Interaxle tire changes

Tread wear patterns differ at the front and rear wheels according to the individual operating conditions. In the interest of safety and optimal vehicle response, we advise against rotating tires from front to rear and vice versa. Wheels of size 8½ J x 17 AH2 should generally not be used on the front axle. Refer also to the note on page 126.

When considering the potential economic benefits of interaxle tire rotation, you must decide whether the expense of having the tires rotated is likely to be amortized during the anticipated extension in tire life. We recommend that you discuss the matter with your BMW Retailer.

Should you decide in favor of rotating the tires, it is essential to observe the following:

Leave the tires on the same side of the vehicle (include spare in rotation pattern as desired).

Braking response and traction may be adversely affected.

Rotation should always be carried out at short intervals, max. 3,000 miles (approx. 5,000 km).

Following rotation always correct the tire inflation pressure.

Always replace tires after 10 years, regardless of use or tread wear.

Spare tires over 6 years old should be used only in case of emergency. Such a tire should be replaced by a new tire immediately, and should not be fitted together with new tires.

The date on which the tire was manufactured is indicated by the code on the sidewall: DOT ... 327 indicates that the tire was manufactured in the 32nd week of 1997.

The right choice

Tires and wheels

Use only BMW-approved tires.
Due to the high speeds which this vehicle can reach, the use of specific brands, specifications and dimensions is mandatory. Consult any BMW Retailer for details.
Observe national, provincial and state regulations.

The tire codes will aid you in selecting the correct tire. The essential data for radial tires are as follows:

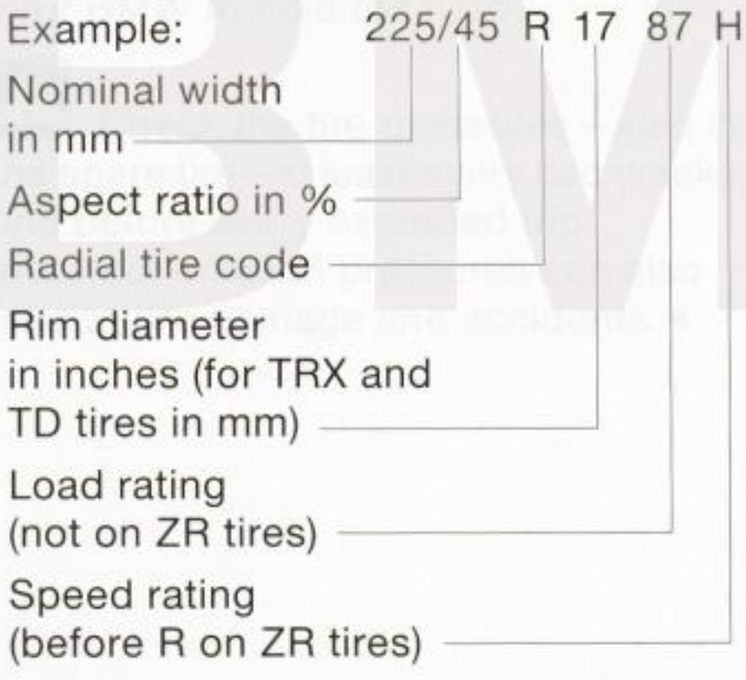

The speed rating indicates the approved maximum speed for the tire.

Summer tires:

H = up to 130 mph (210 km/h)
V = up to 149 mph (240 km/h)
ZR = over 149 mph (240 km/h)

Winter tires:

Q M+S = up to 100 mph (160 km/h)
T M+S = up to 118 mph (190 km/h)
H M+S = up to 130 mph (210 km/h)

Codes stamped on light-alloy wheels:

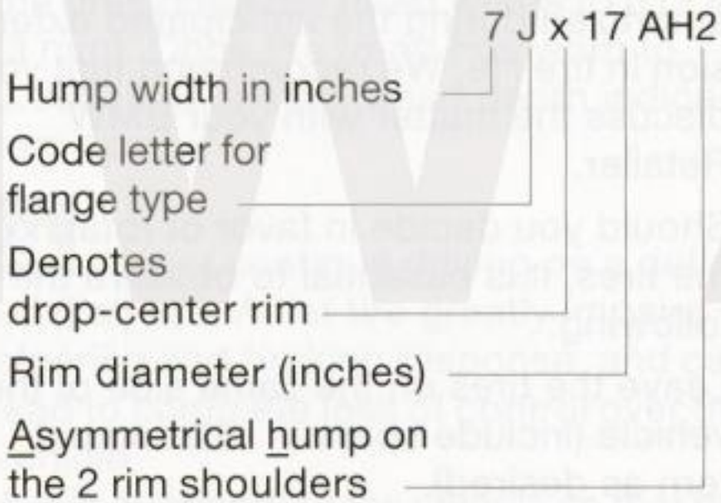

Use screw-on valve stem caps to protect the tire valves against dirt. Dirt in the valves frequently leads to slow leaks.

Winter tires

We recommend winter tires (M+S radial tires) for operation under inclement winter driving conditions. Although all-season M+S tires provide better winter traction than standard summer tires with H, V, W and ZR speed ratings, they generally fail to provide the same levels of performance as standard snow tires in winter driving.

If you fit winter tires, install radial tires of the same tread configuration and from a single manufacturer on all four wheels (better still: on all five wheels). This ensures safe tracking and steering response.

Fit BMW-approved winter tires only. Any BMW Retailer will be glad to provide you with information on the best winter tires for your particular driving conditions.

Winter tires display a perceptible loss in their ability to cope with winter driving conditions once the tread wears to below 0.16 in. (4 mm), and should thus be replaced.

Observe the specified tire inflation pressures - and be sure to have the wheel and tire assemblies balanced every time you change the tires!

⚠ Never exceed the maximum speed for which the tires are rated.
Unprofessional attempts by laymen to service tires can lead to damage and accidents.
Have this work performed by skilled professionals only. Your BMW Retailer will be glad to assist you.◀

Store tires in a cool, dry place, away from light whenever possible. Protect the tires from contact with oil, grease and fuel.

Approved wheels and tires

M3 Sedan, Coupe

Tire specifications	Light-alloy wheel	Rim offset (mm)
225/45 ZR 17[1)] front	7½ J x 17 AH2	41
245/40 ZR 17[1)] rear	8½ J x 17 AH2	41
225/45 R 17 87 H M+S	7 J x 17 AH2	41

[1)] Snow chains can not be fitted.

Winter tires

The use of fine-link BMW snow chains* on summer or winter tires is only permitted in pairs on the rear wheels. Observe the chain manufacturer's safety precautions when fitting the chains.

Wheel with asymmetrical hump (AH)

In case of loss of air from a tire, a rim with a so-called "asymmetrical" hump definitely holds the tire longer than a rim with a symmetrical hump. This feature provides greater safety and security when braking the vehicle to a stop under these conditions.The asymmetrical hump has another additional advantage: it does not require a special tire.

Hood

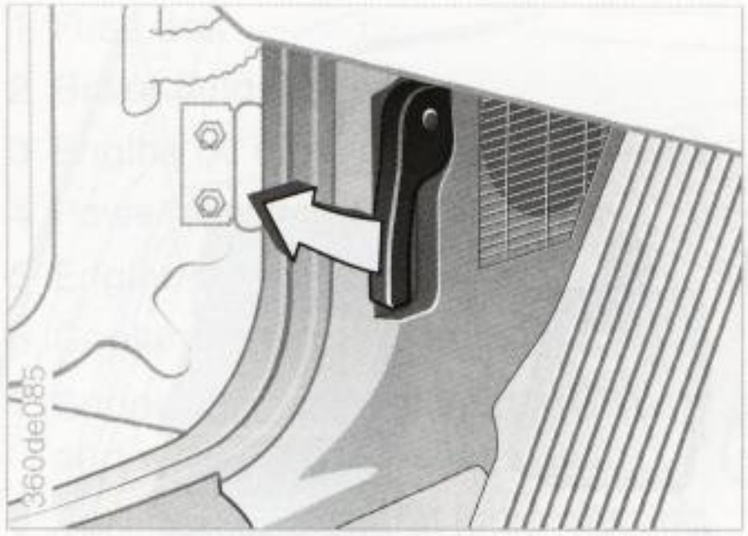

Unlocking

Pull the lever located under the left-hand side of the instrument cluster.

⚠ Do not work on your vehicle without appropriate skills. Always switch off the engine and allow it to cool down before working in the engine compartment.

Always disconnect the battery before working on the electrical system. When working on the vehicle, follow the relevant instructions and information. When you are not familiar with the relevant specifications, have service operations performed by your authorized BMW Retailer. Failure to proceed in an informed, professional manner when servicing components and materials constitutes a safety hazard for yourself and other users of the public roads.◀

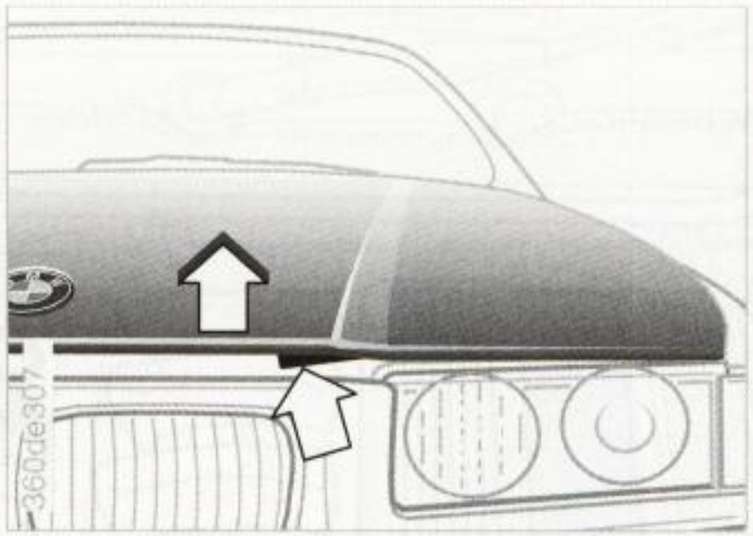

To open

Push the release handle – at the front left under the hood – upward and open the hood.

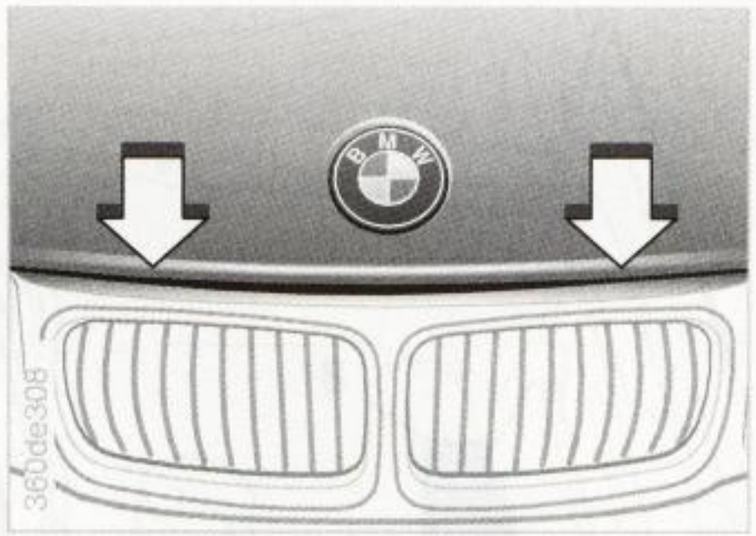

To close

Simultaneously press down both sides of the hood; continue pressing until you hear the latches engage.

⚠ Should you determine that the hood is not completely closed while driving, stop immediately and close it securely.◀

Engine compartment

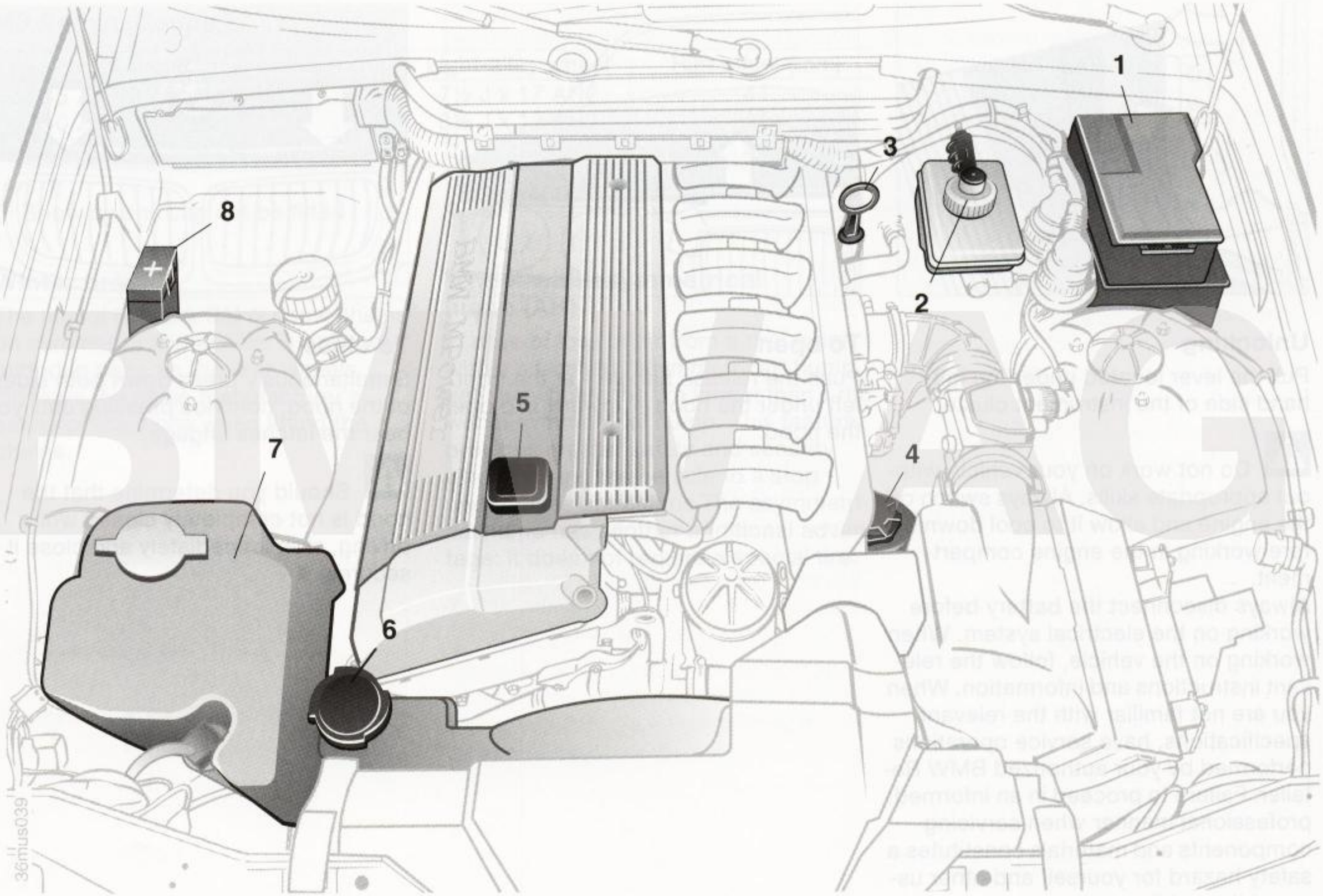

Engine compartment

1 Fuse box
2 Brake fluid reservoir
3 Engine oil dipstick
4 Power steering fluid reservoir
5 Engine oil filler neck
6 Coolant expansion tank
7 Supply tank for headlamp washer* and windshield washer system
8 Auxiliary terminal for jump starting

Washer fluids

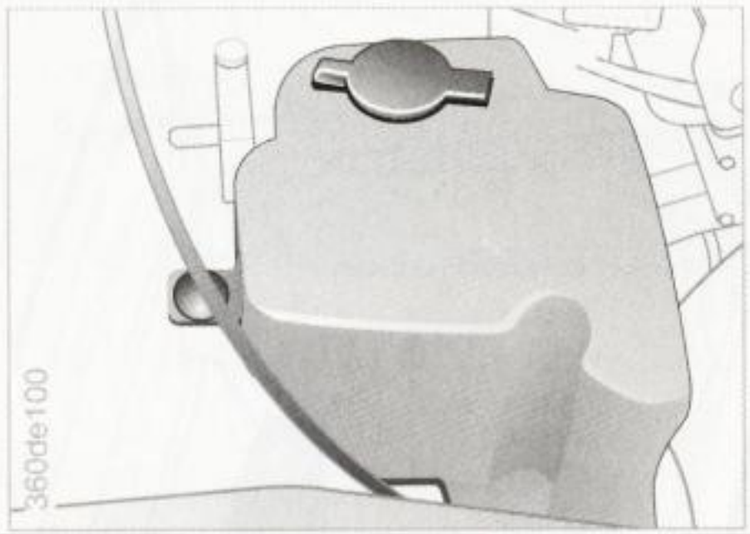

Windshield washer spray nozzles

The spray from the nozzles should be directed so as to ensure effective cleaning, even at high speeds.

Use a needle to adjust the nozzles as required, or have them adjusted by your BMW Retailer.

Headlamp washer* and windshield washer

Capacity approx. 2.65 US quarts (2.5 liters) for the windshield washer or 5.3 US quarts (5.0 liters) in conjunction with the headlamp cleaning system.

Fill with water and - if required - with antifreeze (according to the manufacturer's recommendations).

▷ We recommend that you mix the washer fluid before adding it to the reservoir.◀

Engine oil

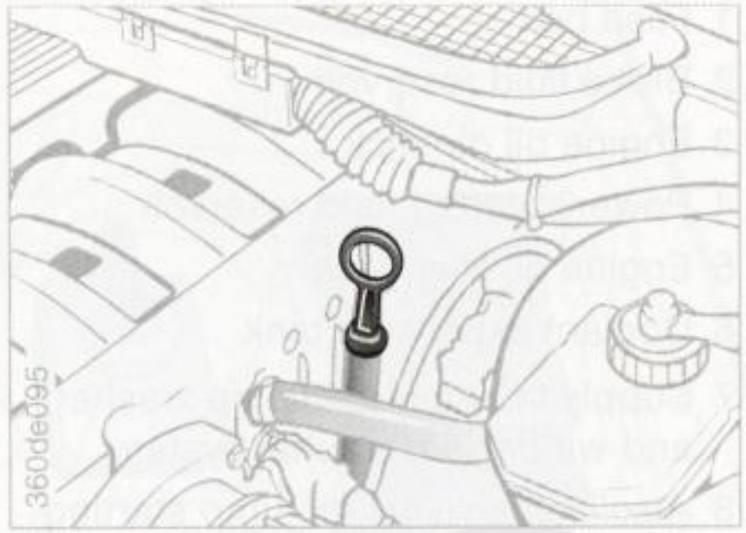

Checking oil level

As with fuel economy, oil consumption is directly influenced by your driving style and vehicle operating conditions. If the message "CHECK ENGINE OIL LEV" appears in the Check Control (refer to page 55), check the oil level with the vehicle on a level surface.

To obtain precise readings:

- Check with engine cold, before starting.
- When checking with the engine warm, wait briefly for the oil to drain back down into the oil pan (e.g., while refueling).

Engine oil

Measure the oil level:

1 Pull out dipstick and wipe off with a lint-free cloth, paper tissue, etc.
2 Push the dipstick all the way into the guide tube and pull it out again
3 The oil level should be between the two marks on the dipstick.

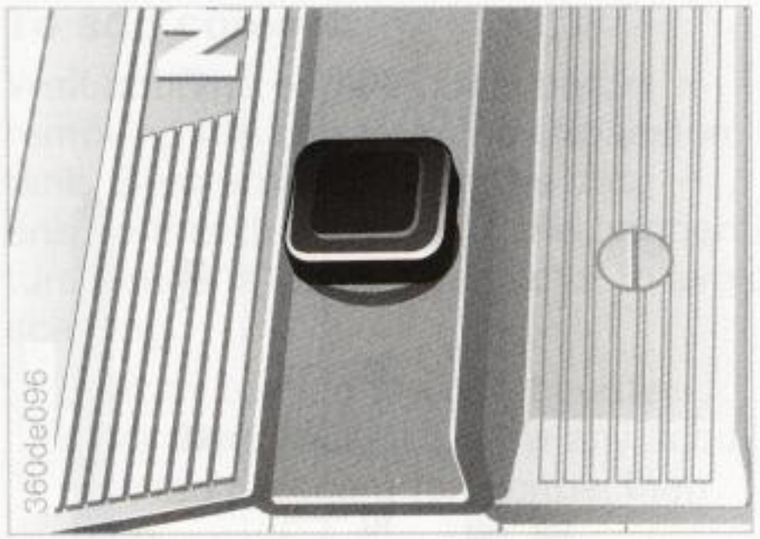

Add oil

Wait until the level has dropped to just above the lower graduation before adding oil. Never wait until the oil drops below the lower mark.

The space between the two marks on the dipstick corresponds to approximately 1.1 US quarts (1 liter). Do not fill to beyond the upper mark on the dipstick. Excess oil harms the engine. Because it would be consumed within a short period, it would also result in an abnormally high rate of oil consumption.

⚠ BMW engines are designed to operate without oil additives; the use of additives could lead to damage in some cases. This also applies to the manual and automatic transmission, the differential and the power steering system.◀

Engine oil specifications

Always refer to the API specifications for quality when selecting engine oil.

Required quality:

API SG
API SH
API–SG/CD
API–SG/CE
API-SH/CD
API-SH/CE

Viscosity ratings

Viscosity = Oil flow rating according to SAE class.

Select the SAE viscosity rating according to the average seasonal air temperature.

Consult the table on the following page to determine the correct SAE viscosity.

You can continue to operate the vehicle for short periods of time at temperatures beyond the range for the SAE rating of the oil being used.

Engine oil

Always observe all environmental protection guidelines and regulations when disposing of used oil.◀

Recommendation: have the oil changed by your BMW Retailer.

Continuous exposure to used oil has caused cancer in laboratory testing. Any skin areas that come in contact with oil should be thoroughly washed with soap and water.
Always store oil, grease, etc., out of reach of children. Observe all warning labels and information on lubricant containers.
If you use SAE 15W-40 engine oil in low temperatures below 14 °F (-10 °C) the engine may become difficult to start.◀

* Special engine oils individually approved by BMW are the most suited to your engine. Please contact your BMW Retailer for details.

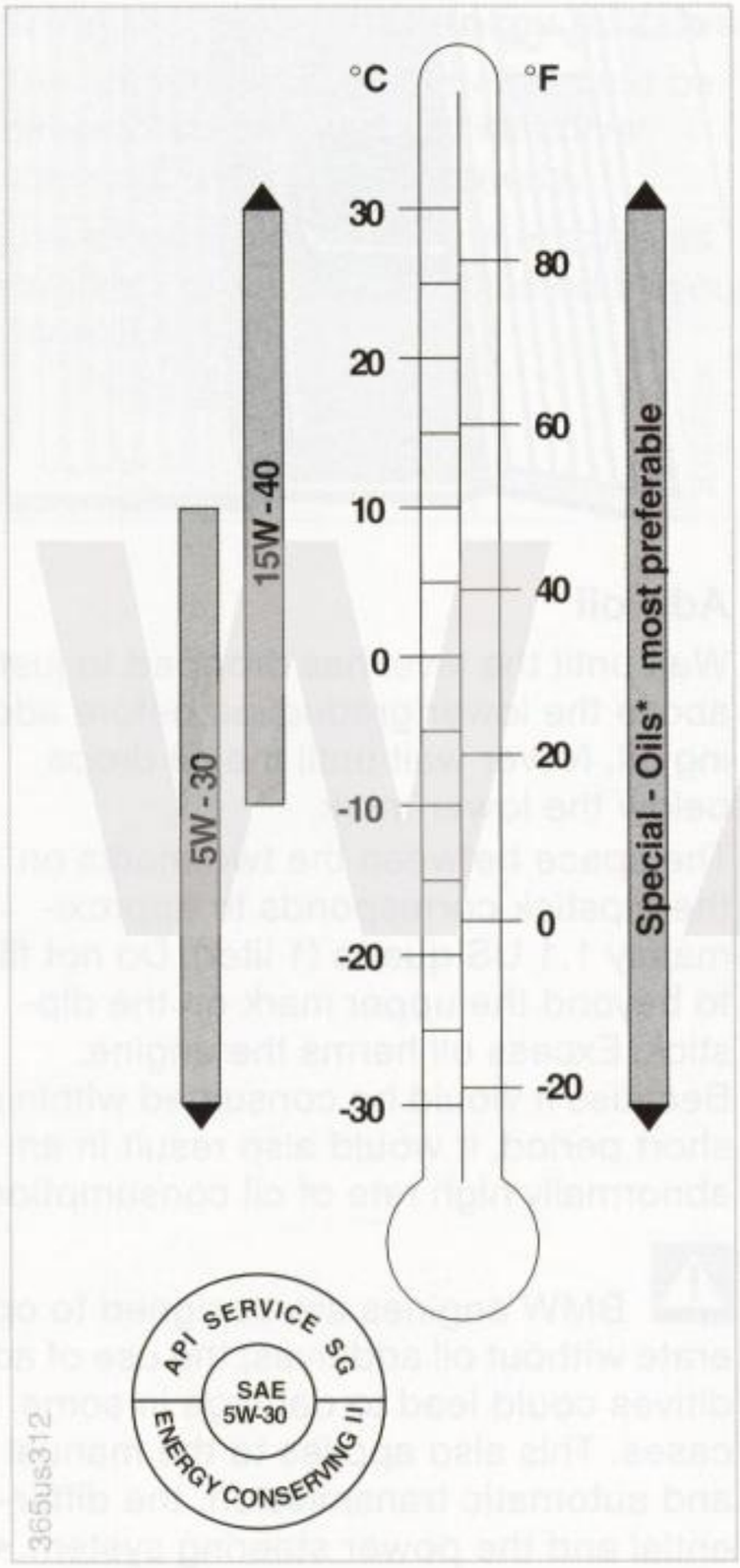

Coolant

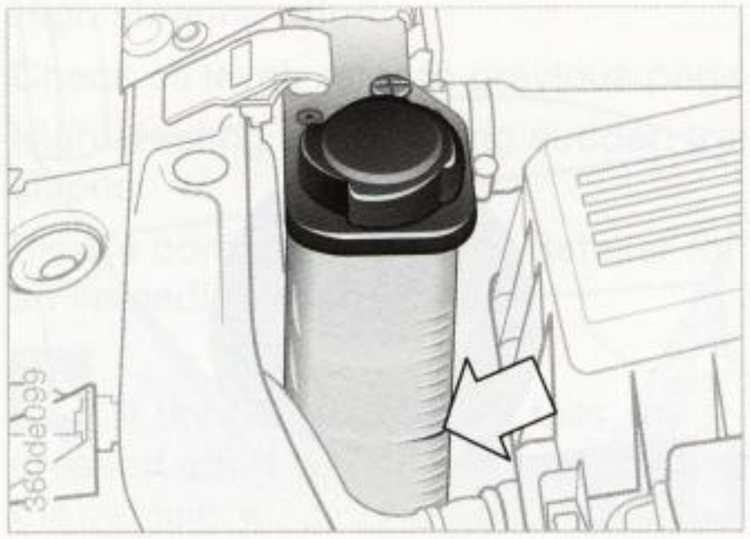

Coolant level with engine cold: up to the mark (arrow) on the transparent supply tank.

The coolant is a mixture of water and extended-duty antifreeze with corrosion inhibitor. Always maintain the prescribed all-season 50:50 mixture ratio for year-round protection against internal corrosion. No other additives are required.

Replace the coolant every three years.

To add coolant

Wait until the engine cools before removing the cap from the expansion tank. Before unscrewing the cap, ensure that the needle on the temperature gauge is in the blue sector to avoid scalding.

- Start by turning the cap counterclockwise. Pause to allow any accumulated pressure to escape, then open.
- Add coolant up to the KALT/COLD mark. Excess coolant drains off through the overflow line.

If you have to top up with more than 0.53 US quarts (0.5 liters), you should take additional measures.
Please contact your authorized BMW Retailer for additional information.

Do not add coolant while the engine is hot.
To avoid the possibility of damage later on, never use anything other than factory-approved nitrite and amino-free long-term antifreeze and corrosion protectant. Your authorized BMW Retailer is familiar with the official specifications.

Antifreeze with corrosion protectant is toxic. Always store in original containers only, keeping them tightly closed. Store well out of reach of children. When disposing of it, observe the applicable environmental protection laws. Long-term antifreeze and corrosion protectant contains the flammable substance ethylene glycol. You should therefore avoid spilling it on hot engine components, as it could catch fire and cause serious burns.◀

Observe the applicable environmental protection laws when disposing of used antifreeze.◀

Brake fluid

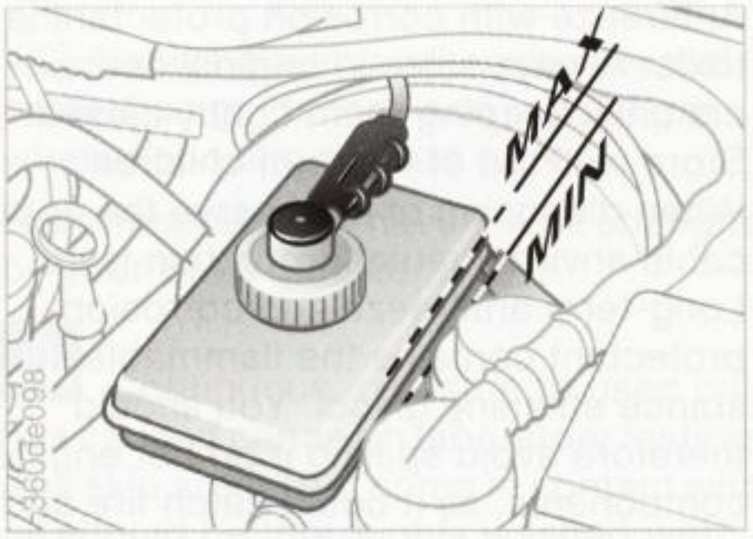

Warning lamp for brake hydraulic system lights up:

Brake fluid loss resulting in extended pedal travel.

Fill up to the upper mark (MAX, level visible from the outside).

Any BMW Retailer can provide you with information on factory-approved brake fluids (DOT 4).

Brake fluid is hygroscopic, i.e., it absorbs moisture from the atmosphere over the course of time. To ensure maximum efficiency of your brake system, we recommend that you have the brake fluid changed at a BMW Retailer every two years (refer also to pages 89 and 115 and to Service and Warranty Information booklet). Brake fluid is toxic, and also attacks vehicle paintwork. Always store in the original containers, and keep them tightly closed, out of reach of children. When disposing of it, observe the applicable environmental protection laws. Do not spill brake fluid and do not fill beyond the MAX graduation on the reservoir. Should it come into contact with hot engine components, the brake fluid could catch fire and cause serious burns.◄

Please observe the applicable environmental protection laws when disposing of used brake fluid.◄

Power steering fluid

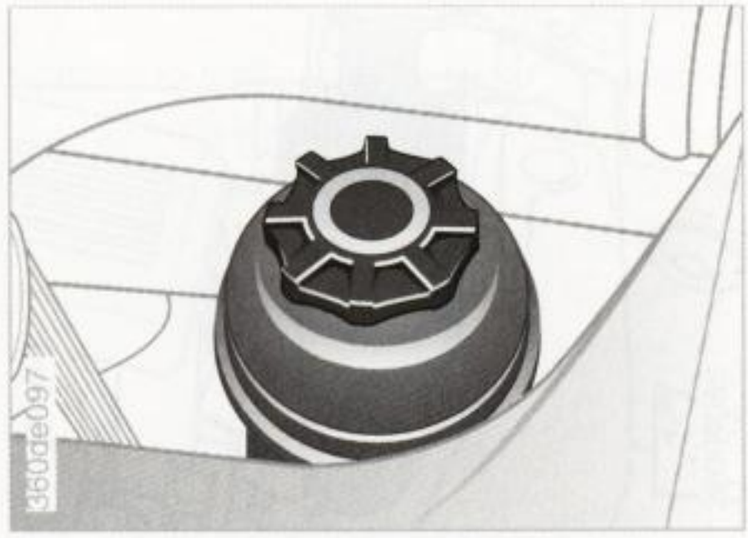

With the engine off, unscrew the reservoir cap, then reinsert it.

The fluid level should be in between the graduations on the dipstick.

Use ATF to top up as required. Your BMW Retailer can provide you with the fluid specifications.

Start the engine. Pour in more fluid as required, continuing until it reaches to between the two marks.

Switch off the engine. The fluid may rise to approx. 0.2 in (5 mm) above the upper mark.

Screw the reservoir cap back on.

Power steering fluid

High steering effort:

Check oil level, refer to previous page

High steering effort during sudden transitions:

Please contact your BMW Retailer for an immediate inspection.

If the power steering fails, increased effort will be required to steer the vehicle.◀

Vehicle Identification Number

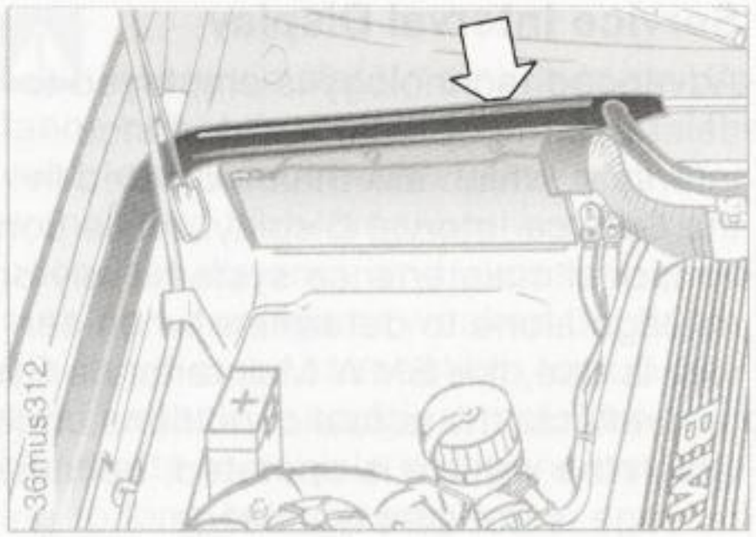

In the engine compartment on the right-hand side of the heater partition panel (arrow).

The information on the data plate and the Vehicle Identification Number must match those contained in the vehicle papers.

These data are essential for processing inquiries, expediting service procedures and when ordering replacement parts.

The BMW Maintenance System

The BMW Maintenance System has been designed as a reliable means of providing the customer with maximum vehicle-operating safety at minimum expense.

Please remember that regular periodic maintenance plays an essential part in ensuring continued vehicle security. It also helps maintain the resale value of the vehicle.

Service Interval Display

Advanced technology is employed to calculate the optimal maintenance intervals, which are then indicated in the Service Interval Display. While conventional maintenance systems rely on mileage alone to determine when service is due, the BMW Maintenance System reflects the actual conditions under which the vehicle is operated, because mileage is not simply mileage:

From the point of view of maintenance, 62,000 miles (100,000 km) accumulated in short-distance driving are not the equivalent of the same distance covered in long-distance highway travel.

The BMW Maintenance System includes the Engine Oil Service as well as Inspections I and II.

Determining the maintenance intervals according to the actual loads on the car covers every kind of operating situation. However, drivers who cover only extremely short distances - substantially less than 6,200 miles (10,000 km) annually - should have the engine oil changed at least once a year, as it continues to age whether or not the car is used on a regular basis.

Service and Warranty Information booklet

Please refer to the Service and Warranty Information booklet for additional information on maintenance intervals and procedures.

Depending on operating conditions, as a precaution against rust it may be a good idea to have the body checked for stone damage and chips at the same time.

Please ensure that all maintenance operations are entered in the Service and Warranty Information booklet upon completion. These entries will constitute your proof that the vehicle has received regular maintenance. They are also required for warranty claims.

▷ Have your BMW Retailer carry out the maintenance and repair.
Your BMW Retailer is always informed on the latest maintenance work and repair techniques and equipped with the required special tools. In addition, the testing of parts known from experience to be subject to wear is a permanent part of the maintenance specifications.◀

Washing your car

Right from the start, you can wash your new BMW either by hand or in an automatic car wash.

To prevent spots, avoid washing when the hood is still warm, or immediately after and during exposure to strong sunlight.

When using an automatic car wash, ensure that

- no damage occurs to vehicles with add-on body elements (e.g., spoilers, telephone aerials). Consult the car wash operator if necessary
- the vehicle is cleaned with minimum brush pressure, and that ample water is available for washing and rinsing.

Loosen and remove stubborn dirt and dead insects before washing the car.

Always maintain an adequate distance between the spray source and the vehicle's surface when using spray wands and high-pressure washers. Inadequate distance and excessive pressure can damage or weaken the finish, making it more susceptible to subsequent attack. In addition, moisture could penetrate to vehicle components, leading to long-term damage.◀

Parts of the car which are inaccessible to the automatic washer - such as door sills, door and hood edges, etc. - should be cleaned by hand.

Please observe the following when cleaning the headlamp covers:

- Do not clean by wiping with a dry cloth (scratches). Never use abrasives or strong solvents to clean the covers.
- Remove dirt and contamination (such as insects) by soaking with BMW Car Shampoo and then rinsing with plenty of water.
- Always use a de-icer spray to remove accumulated ice and snow – Never use a scraper!◀

In the winter months, it is especially important to ensure that the car is washed on a regular basis. Large quantities of dirt and road salt are difficult to remove, and they also cause damage to the vehicle.

After washing, the brakes may be wet and thus less effective! Apply the brakes briefly to dry them.◀

Exterior finish

To provide effective corrosion protection, multi-layer paintwork is applied at the factory. Cataphoretic immersion priming techniques are supplemented using special body-cavity protectants, with the application of specially-developed and extensively tested materials.

The entire underbody is sprayed with a flexible PVC layer before final comprehensive application of a wax-based protectant.

Regular maintenance makes an important contribution to maintaining the safety and value of your vehicle.

Increasing awareness of the effects of harmful environmental factors on vehicle finishes have led paint and vehicle manufacturers to initiate ongoing programs designed to further improve the durability of their finishes. Despite the high quality of the resulting products, local and regional factors can still have a negative effect on your car's paintwork. These should guide you in determining the frequency and extent of your efforts to maintain the vehicle finish.

Depending upon material and type of impact (perforation of paint layer), physical stresses from sand, road salt, gravel, etc. can cause corrosion to start extending beneath the finish, starting at the point of impact.

Road dirt, tar spots, dead insects, animal droppings (strong alkali effect) and tree excretions (resins and pollen) all contain substances capable of causing damage when allowed to remain on your car's finish for any period of time (spots, etching, flaking, separation in the top coat).

In industrial areas, deposits of rusty ash, lime, oily soot, sulphur dioxide in precipitation (acid rain) and other environmental pollutants will damage the vehicle's surface (usually limited to the external horizontal surfaces) unless adequate protection is provided.

In coastal regions, high levels of atmospheric salt and humidity promote corrosion.

In tropical zones, temperatures of over 100 °F (approx. 40 °C) in the shade prevail, in addition to heavy ultraviolet radiation and high humidity. Under those circumstances, light-colored paints reach temperatures of up to 175 °F (approx. 80 °C) and dark paints up to 250 °F (approx. 120 °C).

Caring for the vehicle finish

As a precaution against damage resulting from exposure to aggressive substances, we recommend that you wash the car weekly when it is used in an area with high levels of air pollution or aggressive natural substances (tree resin, pollen).

Remove particularly aggressive substances immediately in order to prevent changes to, and discoloration of, the paint. Such substances are e.g., gasoline spilled during refueling, oil, grease, brake fluid, and bird droppings.

Any contamination remaining on the surface of the vehicle will be especially conspicuous after washing. Use cleaning fluid or alcohol with a clean cloth or cotton pad to remove. You can use tar remover to remove any spots on the finish of the vehicle, but should never apply it or any other aggressive cleanser to lenses or headlamp covers. These areas should then be waxed to maintain protection.

▷ A full range of car-care products is available from your BMW Retailer.◀

Waxing your car

Protect the finish using carnauba or synthetic-based waxes only.

The best way to determine when the finish needs to be waxed is by noting when water stops beading on the surface.

You can use a glass cleaner to remove any wax or silicone that may have been left on the windows during waxing.

▷ A full range of car-care products is available from your BMW Retailer.◀

Paint damage

You can touch up small areas of damage with BMW spray paint, a BWM touch-up stick or BMW paint tape.

The paint color code for your car is provided on a sticker located next to the data plate and on the first page of your Service and Warranty Information booklet.

Damage caused by flying stones, scratches, etc. must be touched up without delay to prevent rust from forming.

If corrosion has started to form in an area with paint damage, remove all rust and clean the area, then prime the area with a BMW Primer Stick. Finally, apply the finish coat. Wait a few days, then polish the repaired area. Finish by applying a wax preservative.

More extensive paint damage should be professionally repaired in accordance with the manufacturer's instructions. Your BMW Retailer uses original BMW finish materials in accordance with official repair procedures.

Caring for other vehicle components and materials

Light-alloy wheels* should be treated with alloy wheel cleaner, particularly during the winter months. Refrain from using aggressive products containing acids, strong alkalis or abrasives. Alloy wheels should not be cleaned with a steam jet operating at temperatures above 140 °F (60 °C) (follow the manufacturer's instructions).

You can use window and glass cleaner to clean inside window surfaces and mirrors without smearing and streaking. Never use polishing pastes or abrasive (quartz) cleansers on mirror lenses.

Clean plastic parts, imitation leather surfaces, the roof lining, the lenses of lamps, the glass cover of the instrument cluster and all dull black sprayed parts with water or products for the care of plastics. Avoid soaking the headliner. Never use solvents such as lacquer thinner, heavy-duty grease remover, fuels, etc.

Rubber components should be cleaned with water only; a rubber treatment or silicone spray may also be applied.

Clean the wiper blades with soapy water. The wiper blades should be replaced twice a year, before and after the cold season.

The safety belts should be cleaned with a mild soap and water solution without being removed from the car. Never attempt chemical or dry cleaning, as damage to the belt fabric could result. After cleaning, never allow the inertia reel to retract the belts until they are completely dry. Dirty safety belts prevent the inertia reel mechanism from retracting the strap properly, and thus constitute a safety hazard.

Heavily soiled floor carpets and mats* can be cleaned with an interior cleaner. The floor mats can be removed from the vehicle for cleaning.

Please use only a damp cloth to clean wooden fascia panels and components. Follow up by drying with a soft cloth.

▷ Products for cleaning and care are available from your BMW Retailer.◀

Care of upholstery materials

Depressions resulting in the upholstered materials in the course of everyday use can be brushed up by brushing with a lightly dampened brush "against the nap".

The tendency of the pile to lie in a particular direction on velour upholstery is not a quality defect, and, just as on home textiles or clothing, can not be avoided.

Fuzz on upholstery materials, rubbed-in fabric or suede residues can be removed with a fuzz or Velcro® brush. A cleaning glove is available for particularly "stubborn" fuzz. Stains and fairly large areas of dirt should be cleaned off without delay, using lukewarm water and an interior cleaner, stain remover or cleaning-grade benzene. Brush the fabric afterwards to restore its appearance.

If the upholstery is to be exposed to intense sunlight or if the vehicle is to be stored for an extended period, cover all seats to prevent fading.

▷ A full range of car-care products is available from your BMW Retailer.◀

The build-up of an electrostatic charge on the seat covers, particularly if atmospheric humidity is low, can give the occupants an unpleasant electric shock if they touch metal body parts after leaving the vehicle. Although this is not dangerous in any way, it can be avoided by touching a bare or polished metal part of the car while getting out.

If necessary, anti-static products can be used to eliminate this effect to a large extent.

Amaretta*

Amaretta is a synthetic micro-fiber with qualities of velour and leather. On the standard fabric seats, it is used for the side skirt of the seat.

A periodic brushing with an Amaretta brush or a soft natural-hair brush suffices for the up-keep of the material.

Vacuum light dirt (dust, etc.) and then brush the area.

Dab off water drops or other spots from liquids, immediately.

More seriously soiled surfaces can be cleaned using a mild, bleach-free detergent for gentle fabrics (2 tablespoons added to 1.1 US quarts/1 liter of water). Dab out stains with a neutral, fuzz-free cloth or a sponge.

Afterwards, remove water spots from the material using clear water; when doing this do not rub the surface forcefully or scour it. Brush the surface only after it is dry.

Use spot-removing spray (K2r powder-spray) to remove oily and greasy stains that persist even after immediate treatment with a mild detergent. Remove the dried powder residue with a vacuum cleaner, then brush the Amaretta.

Leather care

The leather upholstery* used by BMW is a natural product of the highest quality, processed using state-of-the-art methods to ensure that it will maintain its high quality for years to come, provided that it is properly cared for.

Because this product is manufactured using natural materials, you must make allowance for its special characteristics as well as for the peculiarities of its use and care.

Regular periodic cleaning and care are essential, as dust and road dirt act as abrasives in the pores and creases of the material. This leads to wear spots and premature brittleness on the surface of the leather. We therefore suggest that you clean the leather with a vacuum cleaner or dust cloth at frequent intervals.

For cleaning, use BMW leather cleaning foam.

As dirt and grease can slowly attack the protective layer of the leather, the cleaned leather surfaces must be treated with BMW Leather Care. This serves also as an anti-static agent.

To protect against moisture and water, you can treat the leather with BMW Impregnating Agent.

We recommend that you perform this procedure twice a year on leather exposed to normal use.

Spills should be wiped up immediately. Remove grease and oil stains without rubbing, but rather by dabbing with spot remover.

If the upholstery is to be exposed to intense sunlight or if the vehicle is to be stored for an extended period, cover all leather surfaces (or, better yet, the windows) to prevent fading.

Water-buffalo leather*

Water-buffalo leather is left in its natural state and exhibits slight differences in color. Insect bites and creases in the hide, as well as a certain degree of "use-patina", are typical, normal properties of this leather.

When it is damp, new water-buffalo leather can slightly discolor light clothing.

For cleaning and care, proceed as described under "Leather care".

Always remove water drops promptly; avoid excessive wetness due to wet clothing or in the process of cleaning.

▷ Products for cleaning and care are available from your BMW Retailer.◀

⚠ Cleaning agents can contain dangerous or unhealthy ingredients. Therefore always observe the warnings and danger notices on the package.
Open the doors or windows on your vehicle when cleaning the interior.
Never clean your vehicle with solvents or other materials not specifically intended for this application.◀

Vehicle storage

If the vehicle is to be temporarily stored for more than three months, have the following maintenance performed by your BMW Retailer:

1 Cleaning, preservation and retreatment of the engine, engine compartment, underbody, axles and subassemblies in accordance with the factory specifications. Vehicle washing with interior cleaning followed by paint and chrome care. Clean rubber seals of the hood, luggage compartment lid and doors and rub with either talcum powder or glycerine oil.

2 Change engine oil and oil filter at operating temperature. As an additional corrosion protection measure, an anti-corrosive agent can be added to the engine in accordance with the manufacturer's instructions.

3 Check the coolant level and concentration and top up if necessary.

4 Check the acid level in the battery cells and add distilled water if necessary.

5 Increase the tire inflation pressure to 50.9 psi (3.5 bar).

Conduct the following work immediately prior to storing the vehicle:

1 Activate the parking brake and footbrake to dry them; this will prevent the brake disks and drums from corroding.

2 Store the vehicle in a dry, well-ventilated room, shift into reverse gear or set the selector lever to position P and chock the wheels to prevent rolling. Do not set the parking brake.

3 Remove the battery, recharge and store in a cool, frost-free room.

During storage, recharge the battery every three months, as otherwise it will become unusable. Every time the battery is discharged, especially over extended periods, its service life is reduced.

Removing vehicle from storage

Recharge the battery and replace if necessary.

Then have Inspection I carried out by your BMW Retailer.

⚠ Storage periods during which the battery is disconnected are not taken into consideration by the Service Interval Display for changing the brake fluid. Therefore, make sure that the brake fluid is changed every two years at the latest, regardless of the display. Additional notes: refer to page 106.◀

Replacement procedures:
Onboard tool kit 118
Windshield wiper blades 118
Lamp bulbs 119
Master key with battery lamp 123
Changing tires 124
Battery 127
Fuses 129

In case of electrical malfunction:
Fuel filler door 130
Sliding/tilt sunroof 130

Assistance, giving and receiving:
Jump-starting 131
Towing the vehicle 132
Towing 132

Onboard tool kit

Under the luggage compartment lid. Unscrew the wingnut for access.

Windshield wiper blade replacement

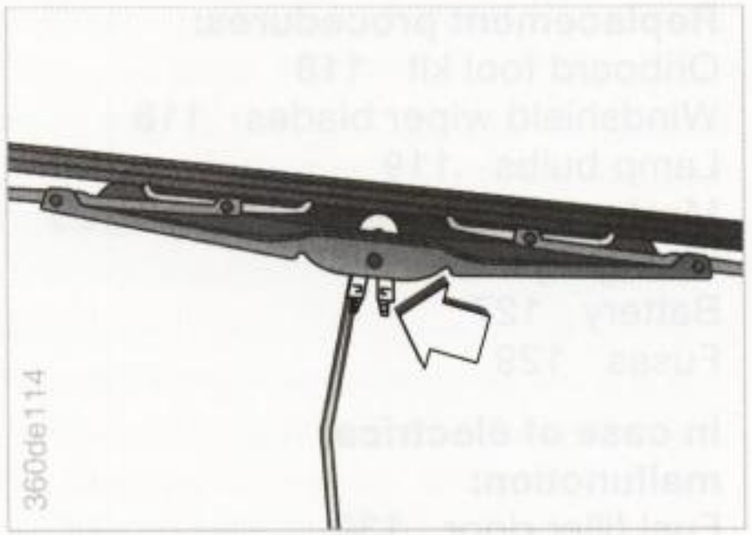

Lift the wiper arm, press the locking spring and pull off the wiper blade, pulling along the wiper arm.

BMW AG

Bulb replacement

The lamps and bulbs on your car play a vital role in ensuring road safety, a fact which you should always bear in mind in caring for them. Carefully observe the following instructions during bulb replacement, referring any procedures with which you are not familiar to your BMW Retailer.

Never touch the bulb glass of a new lamp with your bare hands. Use a clean cloth, paper napkin, etc. or hold the bulb by its metallic base.◀

A replacement bulb set is available from your BMW Retailer.

To prevent short circuits, always switch off all electrical systems and components, or disconnect the negative terminal of the battery, before working on them.
To prevent injuries and damage, always observe any instructions provided by the bulb manufacturer.◀

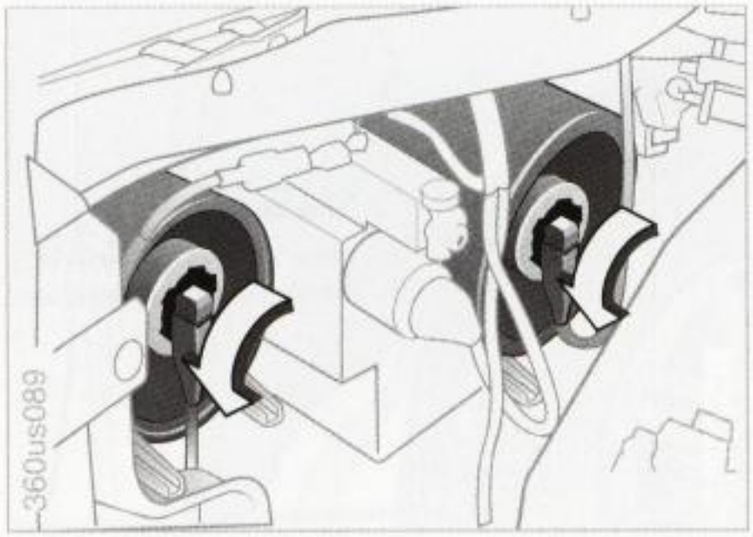

Low and high beams

Low beam:	HB4, 55 watts
High beam:	HB3, 65 watts

Each bulb is pressurized; always wear gloves and eye protection! Failure to observe this precaution could lead to injury if the bulb is accidentally damaged during replacement.◀

- Turn the bulb holder to the left and remove.
- Replace the bulb.

Parking lamp

5 watt bulb

- Press in the upper tab of the bulb holder to release and remove.
- Pull out the bulb holder.
- Pull off the bulb and replace.

Please observe the following when cleaning the headlamp covers:

- Do not rub them dry and do not apply scouring or caustic cleaning agents.
- Remove dirt and contamination (such as insects) by soaking with BMW Car Shampoo and then rinsing with plenty of water.
- Always use a de-icer spray to remove accumulated ice and snow – Never use a scraper!◀

Bulb replacement

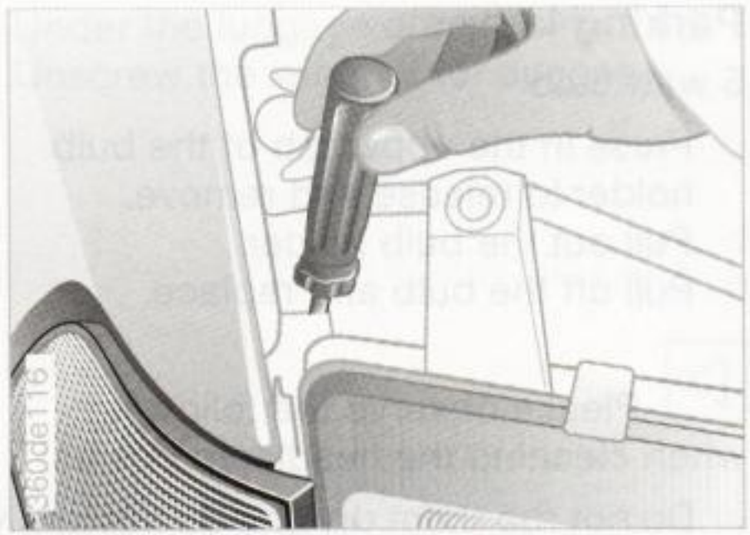

Front turn signals

21 watt bulb

- Release the hooks with a screwdriver.
- Remove the lamp from the front.
- Release the bulb holder and remove.
- Apply gentle pressure to the bulb while turning it to the left to remove.
- After replacing the bulb, re-insert the lamp and push it back until it engages audibly twice.

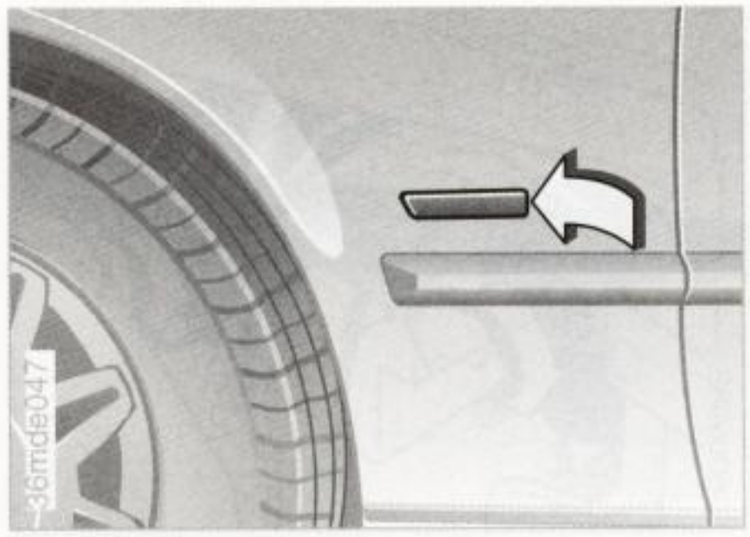

Side turn signals*

5 watt bulb

- Use finger pressure against the rear edge of the lens (arrow) to press it forward for removal.
- Press gently on the bulb and turn it to the left to remove.

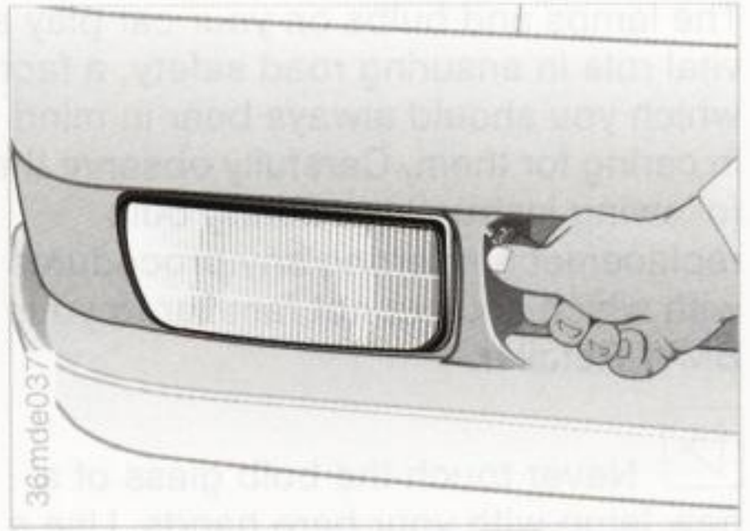

Foglamps*

H1 55 watt bulb

- Release the lamp bracket with a screwdriver.
- Pull the foglamp out toward the front.
- Turn the plastic cap on the back of the lamp to the left and remove.
- Pull off the plug.
- Release the wire spring.
- Replace bulb.
- After replacing the bulb, guide in the lamp again and press on firmly until it audibly engages.

▷ The retainer must be in the "Open" position, otherwise the foglamp can not be guided in.◀

Bulb replacement

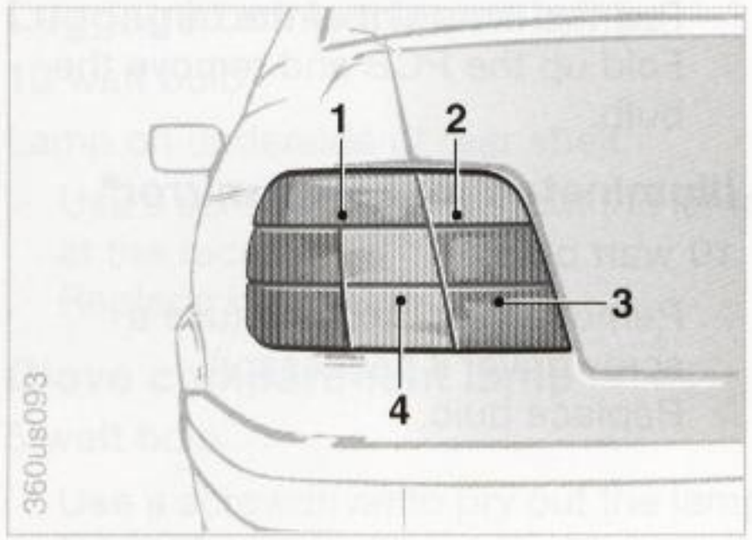

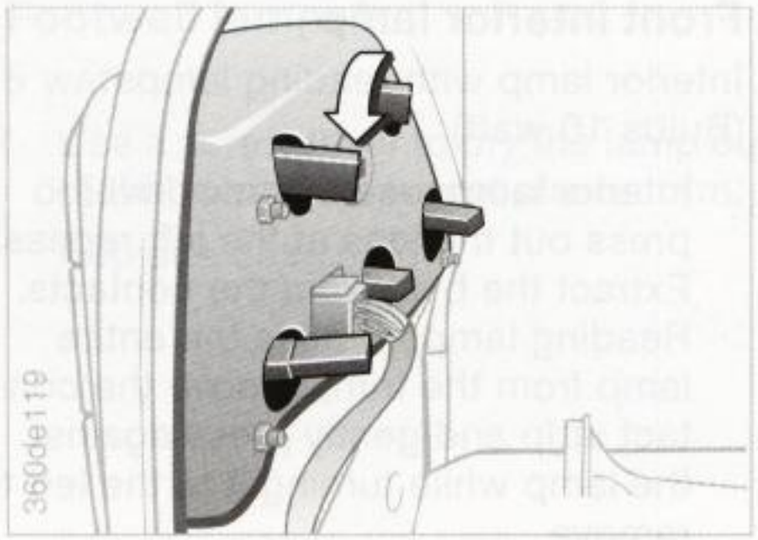

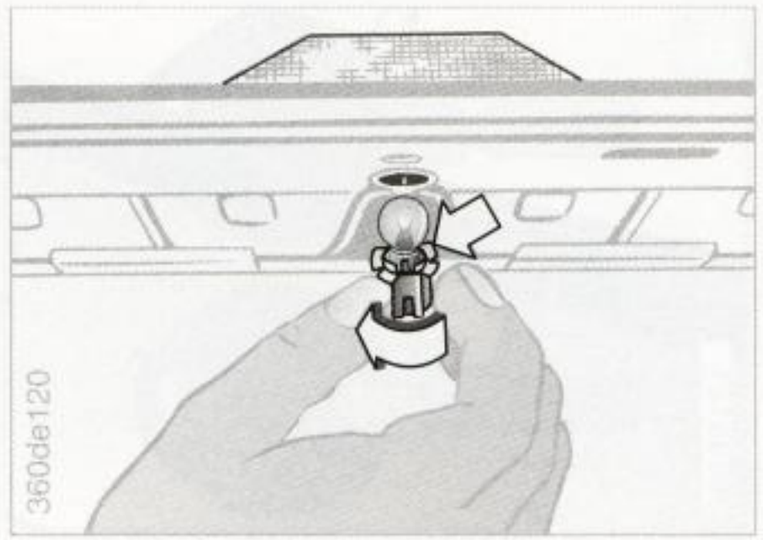

Taillamps

1 Turn signal — yellow
21 watt bulb

2 Backup lamp — white
21 watt bulb

3 Brake lamp — red
21 watt bulb

4 Taillamp/Side markers — red
Bulb 5 watt / 21/4 watt

- Remove the lamp cover after releasing the locking device.
- Once you have found the lamp holder for the defective bulb, push it gently to the rear while turning to the left to remove.
- Use the same procedure to remove the bulb.

Center brake lamp*

21 watt bulb

- Open the luggage compartment lid.
- Push the bulb holder's release knob gently to the rear while turning to the left to remove.
- Use the same procedure to remove the bulb.

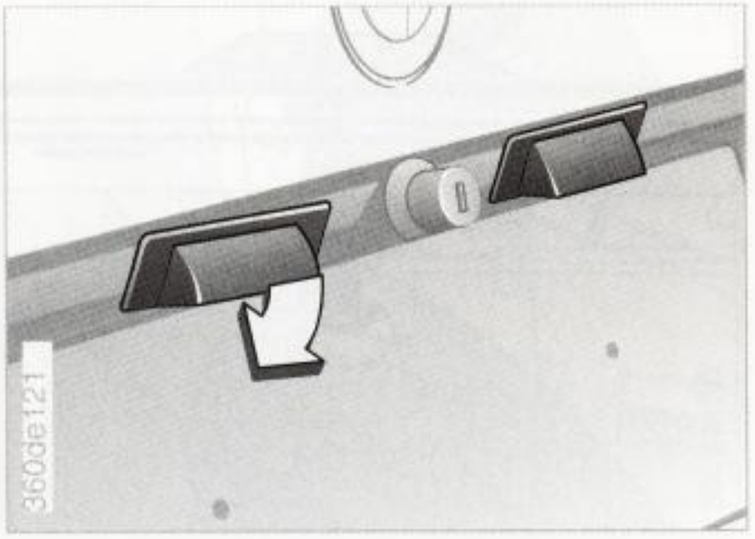

License plate lamps

5 watt bulb

- Screw out the screws and remove the handle.
- Press the bulb holder to the left and remove.
- Extract the bulb from the contacts.

Front interior lamp

Interior lamp with reading lamps:
(Bulbs 10 watt)

- Interior lamp: use a screwdriver to press out the lens at the left recess. Extract the bulb from the contacts.
- Reading lamp: remove the entire lamp from the trim, remove the contact strip and gently press against the lamp while turning it to the left to remove.

▷ When reinstalling, first engage the housing then the lens.◀

Rear interior lamps

Without reading lamp

5 watt bulb

- Pull the lamp out of the trim.
- Fold up the reflector and remove the bulb.

With reading lamp*

6 watt bulb

- Pull the lamp out of the trim.
- Fold up the PCB and remove the bulb.

Illuminated make-up mirror*

10 watt bulb

- Remove lamp housing (use a screwdriver if necessary).
- Replace bulb.

Bulb replacement

Luggage compartment lamps

10 watt bulb

Lamp on underside of rear shelf:

- Use a screwdriver to pry out the lamp at the recess.
- Replace bulb.

Glove compartment lamp

5 watt bulb

- Use a screwdriver to pry out the lamp forward.
- Replace bulb.

Footwell lamps*

5 watt bulb

- Use a screwdriver to pry the lamp out of the lower instrument cluster trim.
- Replace bulb.

Master keys

Replace battery

If light intensity drops, renew the battery to safeguard against acid escaping.

To change the battery, use a screwdriver to remove the cover on the back of the key.

Insert a new battery of the same type (CR 2025) - as shown in the picture - so that it touches the contacts.

Snap the cover back on and press it in evenly.

Bring old batteries to a collection point or your BMW Retailer.◀

Changing tires

⚠ To change a tire, park the vehicle on a flat, hard surface that affords good traction. Avoid jacking the car on a soft or slippery support surface (snow, ice, loose gravel, etc.), as it could slide sideways.

Take extra care to ensure that the base of the jack is positioned on a solid support surface.

Never use wooden blocks or similar objects to support the base of the jack, as the weight of the car could exceed their support capacity.

Never lie beneath the vehicle or start the engine while the car is supported by the jack - risk of fatal injury!

Additional precautions to observe when changing flat tires:
When pulling over on the roadside to change a tire, always try to park the car as far as possible from passing traffic. Turn the steering wheel to the straight-ahead position, remove the key and lock the steering wheel lock. Shift into 1st or reverse (selector lever in Park with automatic) and engage the parking brake.

Switch on the hazard flashers.

All passengers should be outside the car and well away from your immediate working area (e.g., behind the guardrail).

If a warning triangle or portable hazard warning lamp is available, set it up on the roadside at an appropriate distance from the rear of the vehicle.

Observe all safety guidelines and regulations.◀

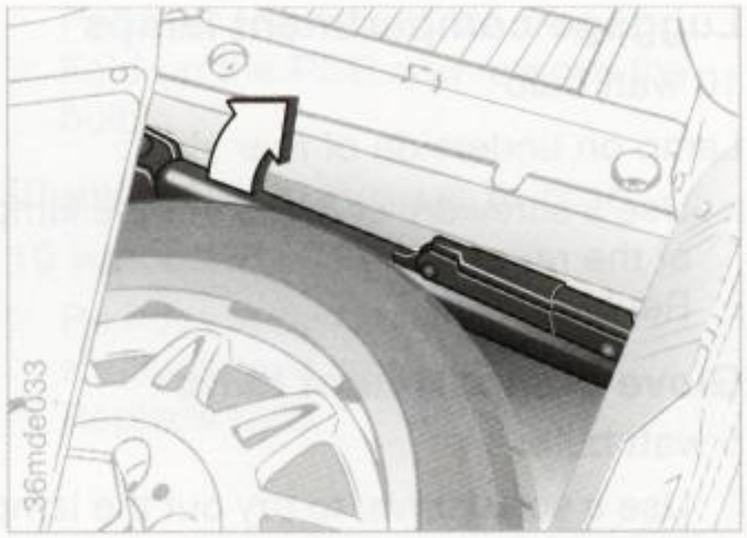

▷ To avoid rattling noises, note the positions of the tools and return them to their original positions.◀

To change the tire you will need

Car jack
In the luggage compartment below the floor mat at the right next to the spare tire.
After using, screw the jack all the way back down and insert it in its holder.

Spare tire
In the luggage compartment under the floor mat. Take out the floor mat. Loosen the wing nut and remove the wheel.

Wheel stud wrench
In the luggage compartment at the right on the box.

Screwdriver
In onboard tool kit beneath luggage compartment floor panel.

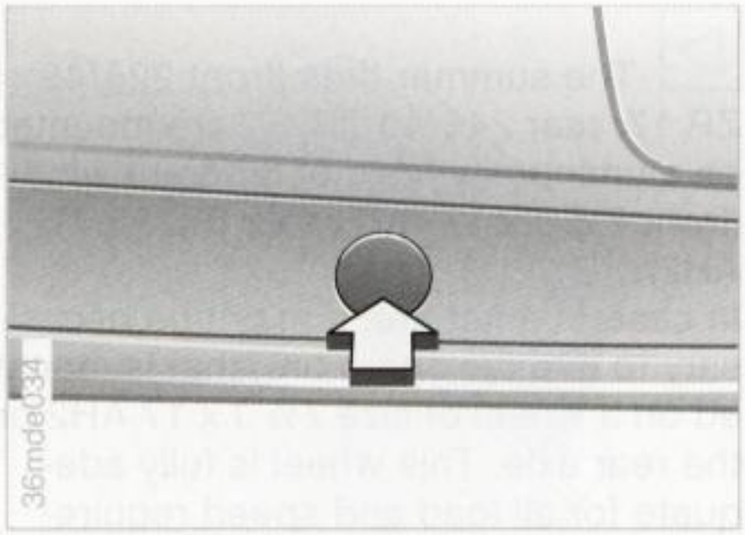

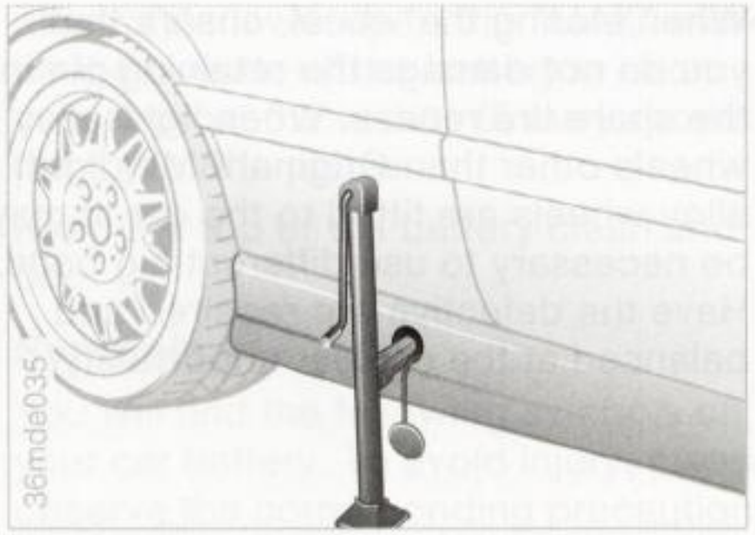

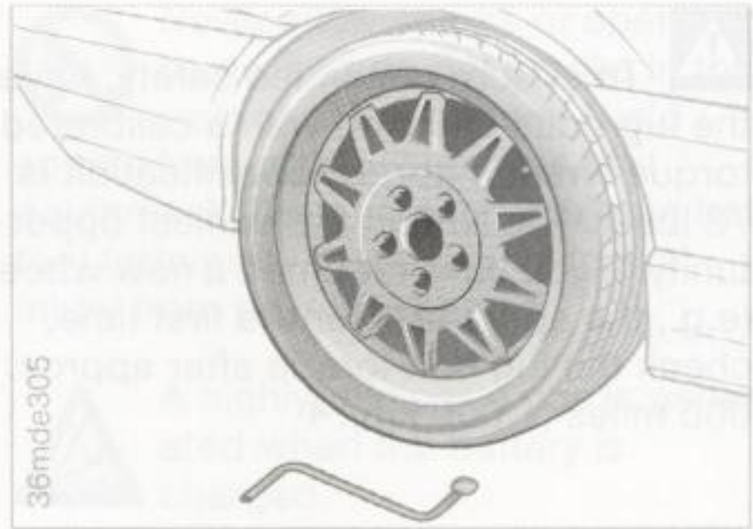

Procedure

1 Loosen the lug bolts ½ revolution.

2 Depress from the bottom the respective protective cover (arrow) for the support of the jack, and remove it.

3 Insert the jack all the way into the support while ensuring that the base of the jack is securely positioned on the road surface. Always chock the wheels to prevent the vehicle from rolling.

4 Turn the handle to raise the jack until the wheel is free of the ground.

⚠ The jack is designed for changing tires only. Never use it to raise another vehicle model or a load of another kind, since that could result in accidents and personal injury.
Never lie beneath the vehicle when it is supported by the jack – risk of fatal injury!◀

5 Unscrew the lug bolts and remove the wheel.

6 Lift the new or spare tire into position, and secure it by screwing in least two lug bolts into opposite sockets.

7 Screw in the remaining lug bolts, then tighten down all the lug bolts, working in a cross pattern.

8 Lower the vehicle, remove the jack, position the protective cover for the jack support with its tab from the bottom and press it on at the top.

9 Tightly screw in the lug bolts, working in a crosswise pattern.

⚠ To ensure continued safety, have the lug bolts checked with a calibrated torque wrench (torque specification is 72 lbs-ft/100 Nm) at the earliest opportunity. If you have mounted a new wheel (e.g., the spare tire) for the first time, check the lug bolt torque after approx. 600 miles (1,000 km).◀

When storing the wheel, ensure that you do not damage the retaining pin in the spare tire recess. When light-alloy wheels other than Original BMW light-alloy wheels are fitted to the car, it may be necessary to use different lug bolts. Have the defective tire repaired and balanced at the earliest opportunity.

▷ The summer tires (front 225/45 ZR 17, rear 245/40 ZR 17) are mounted on aluminum wheels of different width (front 7½ J x 17 AH2, rear 8½ J x 17 AH2).
In case of a flat tire, it might be necessary to use the spare tire, that is mounted on a wheel of size 7½ J x 17 AH2 on the rear axle. This wheel is fully adequate for all load and speed requirements. Nevertheless, it should again be placed on a wheel of size 8½ J x 17 AH2 as soon as possible.
Wheels of size 8½ J x 17 AH2 may not be used on the front axle.◀

Battery

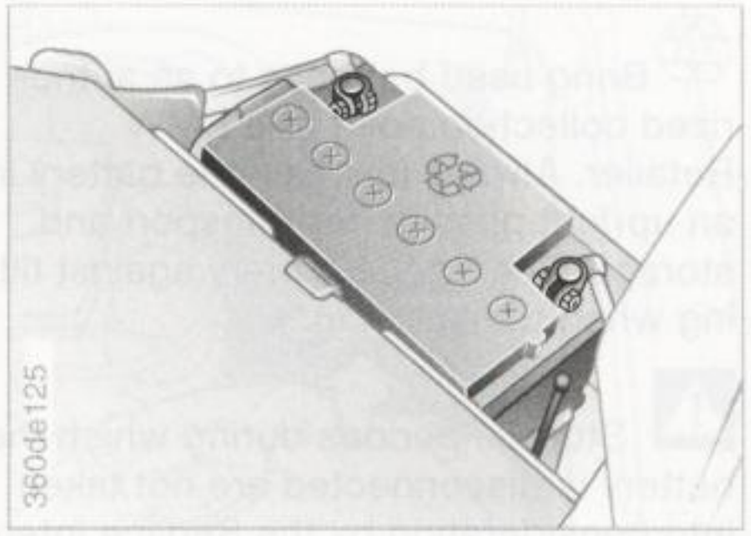

The battery is in the luggage compartment on the right, and is accessible after removing the battery cover. In order to do this, press the tab (arrow) lightly. A jumper cable can be connected to the supplementary positive terminal located in the engine compartment (also refer to page 131).

The battery is maintenance-free, meaning that the electrolyte will normally last for the life of the battery.

Should the electrolyte drop to below the minimum level - e.g., during extended operation in hot climates - add distilled water (no acid!).

Electrolyte level: up to the "MAX" mark on the outside of the battery in each cell, approx. 0.2 inches (5 mm) above the top of the plates.

Keep the top of the battery clean and dry.

Symbols

You will find the following symbols on your car battery. To avoid injury, please observe the corresponding precautions whenever you work with or near the battery.

Before working with the battery, read the following:

Wear eye protection. Avoid letting acid or lead particles come into contact with your eyes, your skin or your clothing.

Battery acid is extremely corrosive. Wear eye protection and protective gloves. Do not tilt the battery; acid could emerge from the ventilation openings.

Ensure that children keep well away from batteries and battery acid.

Never allow sparks or open flame, and do not smoke in the vicinity of the battery. Avoid sparks from electrical cables and equipment. Never short-circuit the battery terminals. There is a danger of injury from powerful sparks.

A highly-explosive gas is generated when the battery is charged.

If you happen to get acid in your eyes, rinse thoroughly for several minutes with clear water. Then consult a physician immediately. If you get acid spray on your skin or clothing, apply soap immediately to neutralize the acid, then rinse with plenty of water. If electrolyte is accidentally ingested, consult a physician immediately.

To protect the casing against ultraviolet radiation, avoid exposing it to direct sunlight. A discharged battery can freeze; always store the battery in areas where the temperature remains above freezing.

Removal and installation

Do not disconnect the battery cable from its terminal while the engine is running, as the resulting voltage surge would destroy the vehicle's electronic systems.◀

When disconnecting, start with the negative terminal, then proceed to the positive side. Unscrew the battery retaining clamp.
When installing the battery, connect the positive terminal first, then proceed to the negative pole.

When installing, always ensure that the battery is properly mounted. Otherwise it will not be sufficiently secured in an accident.◀

Charging the battery

Always ensure that the engine is off before recharging an installed battery.

To avoid short circuits, always disconnect the cable from the battery's negative terminal before working on the electrical system.◀

It is easiest to charge the battery by connecting the cables to the supplementary positive terminal in the engine bay, and to a convenient ground source in the same area (refer to "Jump-starting" on page 131).

If you are planning to remove the vehicle from service for more than four weeks, you should disconnect the battery at the negative terminal.

If you intend to store your car for longer than six weeks: remove the battery, charge it and store it in a cool (but frost-free) room. Recharge the battery after three months at the latest, as it will otherwise be damaged beyond use. Every time the battery is discharged, especially over extended periods, its service life is reduced.

Bring used batteries to an authorized collection point or a BMW Retailer. Always maintain the battery in an upright position for transport and storage. Secure the battery against tilting when transporting.◀

Storage periods during which the battery is disconnected are not taken into consideration by the Service Interval Display for changing the brake fluid. Therefore, make sure that the brake fluid is changed every two years at the latest, regardless of the display. Additional notes: refer to page 106.◀

Fuses

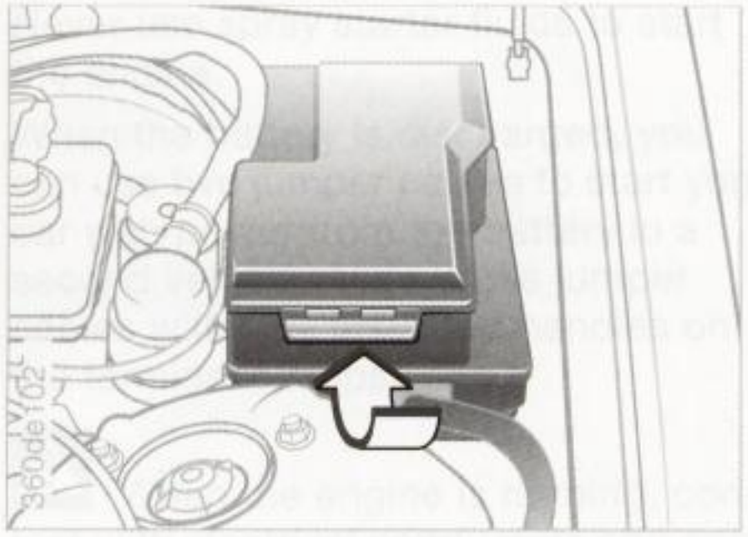

When an electrical accessory fails to operate, switch it off and inspect the fuse.

The fuse box (electrical distribution center) with spare fuses, relays and plastic tweezers, is located on the left-hand side of the engine compartment.

- Press the retaining flap in and lift off the cover.
- Remove the fuse of the defective consumer from the socket with the plastic tweezers.
- If the fuse is burned through (the metal wire will have melted and separated), replace it with a new fuse of the same ampere rating.

A list of the fuses with their respective ampere ratings and the equipment in their circuits is provided in the fuse box lid.

Do not patch burned out fuses or replace them with fuses of a different color or ampere rating, since this could cause an overload on an electrical wire and lead to fire in the vehicle.◀

If the fuse continues to burn through, refer the problem to a BMW Retailer for repair.

Manual activation in the event of electrical failure

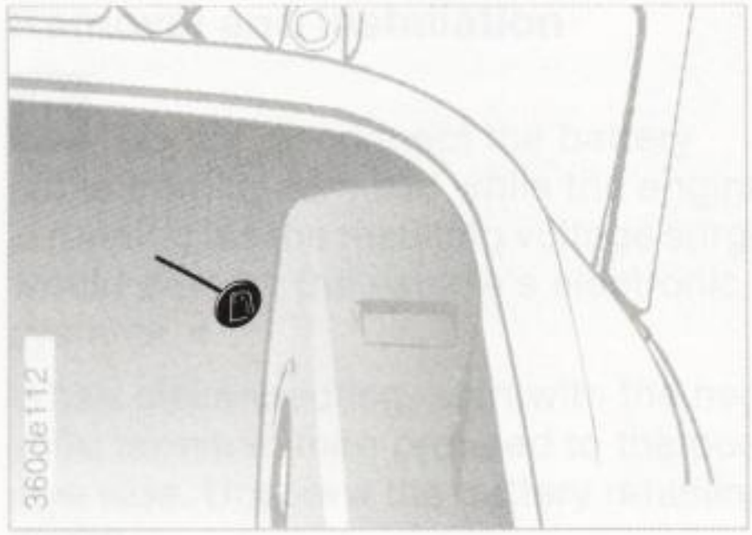

Unlock tank filler door

Pull the handle with the fuel pump symbol on the right trim panel in the luggage compartment.

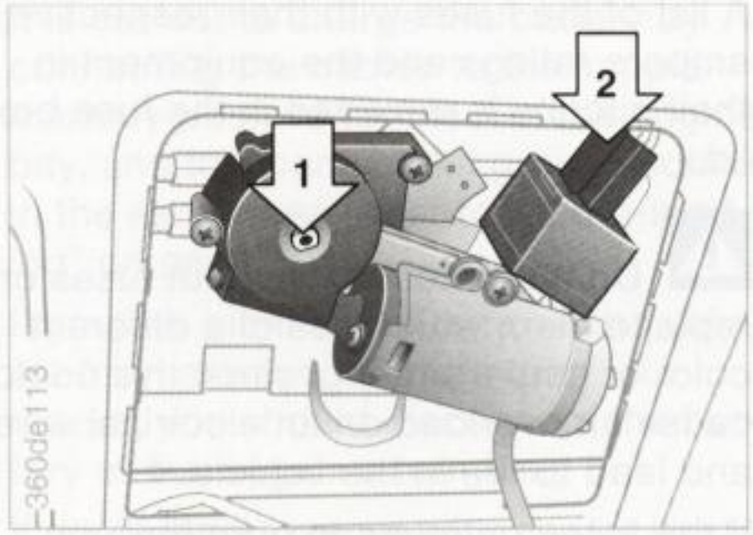

Sliding/tilt sunroof

- Press out the interior lamp with a screwdriver at the left recess.
- Remove the cover panel.
- Remove the Allen wrench from the onboard tool kit, insert it in the hexagon head (arrow 1) and turn the sliding/tilt sunroof in the desired direction.

Turning is easier if the plug (arrow 2) is pulled out beforehand.◀

Have the malfunction rectified by your BMW Retailer at the earliest opportunity.

Jump-starting

Never use spray starter fluids to start the engine.

When the battery is discharged, you can use two jumper cables to start your car with power from the battery in a second vehicle. Always use jumper cables with fully insulated handles on the terminal clamps.

When the engine is running, contact with electrical conductors and components is dangerous and can be fatal.◀

Carefully observe the following instructions to avoid personal injury as well as damage to one or both vehicles:

1 Ensure that the battery on the support vehicle is also rated at 12 volts, and that the capacity (Ah) is roughly comparable (printed on casing).

2 Leave your battery connected to the car's electrical system.

3 The bodies of the two vehicles must not touch, or a short circuit could result.

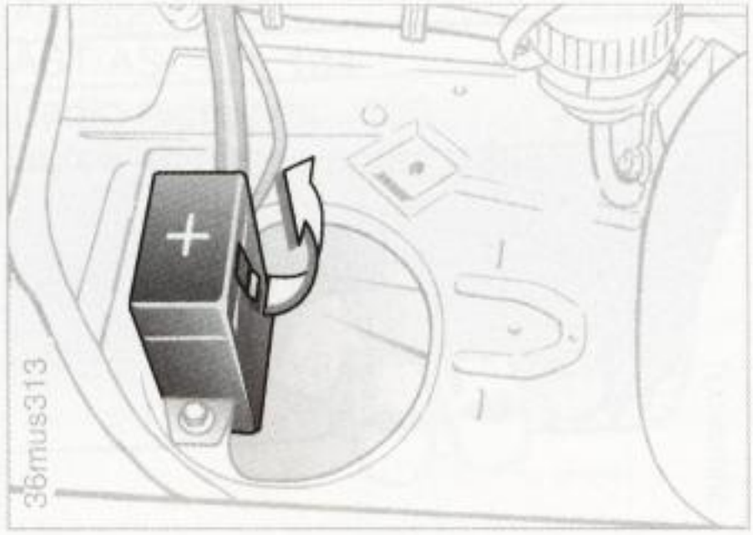

4 Start by connecting the positive terminal of both batteries with a jumper cable. A jump-start terminal is provided in the engine compartment (the cover is marked "+", remove the tab by pulling it, see arrow in the illustration).
Then connect up the batteries' negative poles. Attach the cable to either the support vehicle's negative battery terminal, or to a suitable ground on its engine or bodywork. On the BMW it is a special nut on the suspension strut dome.

Observe the same sequence for connecting the jumper cables when helping other vehicles; this will help prevent sparks from being generated at the battery.◀

5 If the battery on the support vehicle is weak, start the engine and let it run. Start the engine on the vehicle needing the jump-start, and allow it to run as usual. If necessary repeat the attempt to start after a few minutes; this allows for current intake by the discharged battery.
Before disconnecting the jumper cables from your BMW, turn on the lamps, rear window defroster and highest blower speed to prevent a voltage surge at the voltage regulator. Then disconnect the jumper cables in reverse sequence.

Depending on the cause of the fault, recharge the battery.

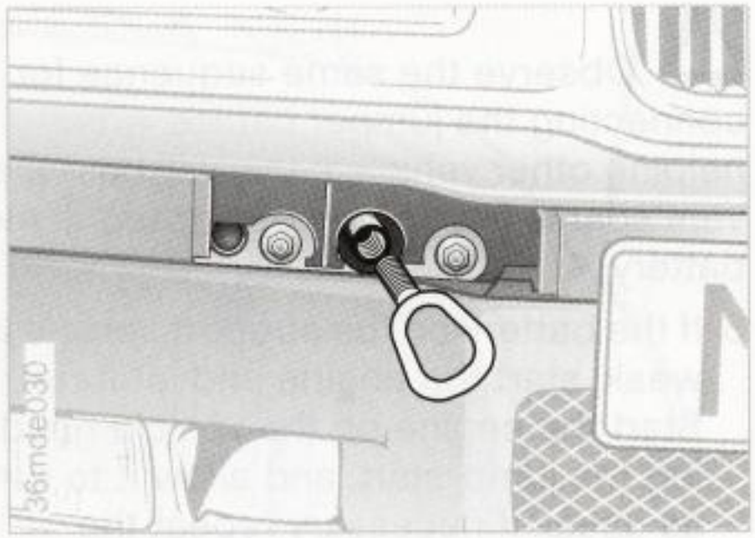

Tow fittings

The screw-in tow fitting is stored in the onboard tool kit; ensure that it remains with the vehicle at all times. It can be screwed in to either the front or the rear of the vehicle and is intended for towing only on a roadway.

Access to tow sockets

Front:

Pry out the cover with a screwdriver.

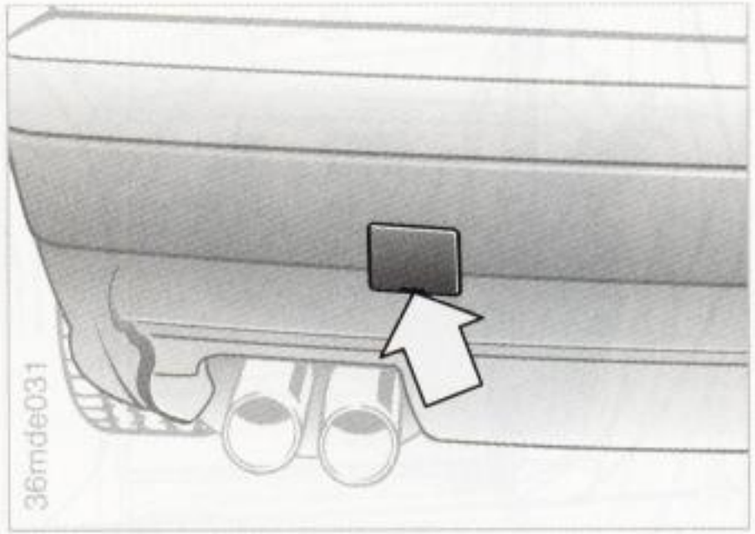

Rear:

Pry out the cover with a screwdriver.

⚠ Ensure that the tow fitting is screwed in tightly.◀

For towing, use either towbars or nylon rope straps which are sufficiently flexible to protect both vehicles from sudden jerking movements.

Towing

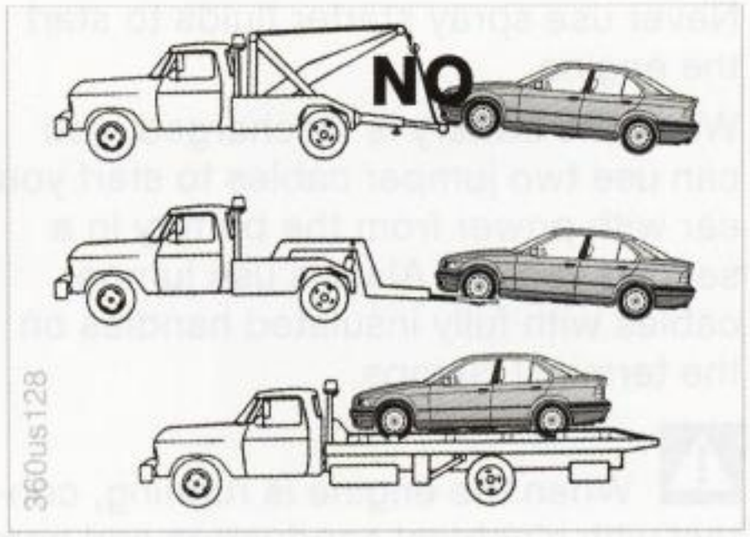

Towing with a commercial tow truck

Never use sling-type equipment to transport the vehicle.

Use wheel lifts or transport the vehicle on a flatbed truck.

Please observe all applicable national, state, provincial and local towing laws.

⚠ Never allow passengers to ride in a towed vehicle.◀

Airbags 134
AST/ASC+T 134
Radio reception 135
Safety belt tensioner 135

Airbags

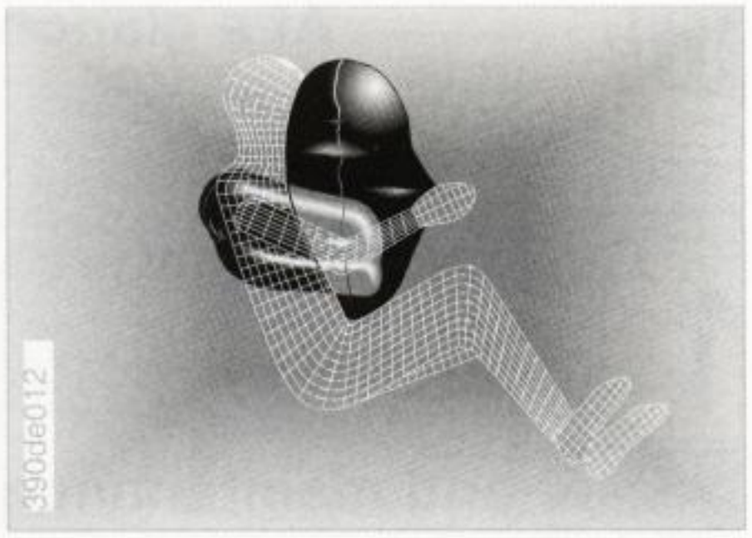

Deceleration sensors continuously monitor the physical forces acting upon the vehicle. If a frontal impact results in deceleration, for which the protection afforded by safety belts no longer suffices, the gas generators of the driver's and the passenger's airbags ignite simultaneously. The passenger's airbag is activated only when a special sensor indicates that the front passenger's seat is occupied.

In the event of a severe side impact the side airbag* is activated on the side on which the impact occurred.

The airbags, which are under the cover of the steering wheel, in the instrument cluster or the side trim panels of the front doors, are deployed and inflated by the gas within a few milliseconds. In the process they tear or push apart the programmed separation points in their upholstered covers.

Because the inflation process must be virtually instantaneous, it is necessarily accompanied by a certain amount of ignition and inflation noise. The gas which the system employs to inflate the airbag is not dangerous, and the associated smoke is quickly dissipated.

The entire process is completed within one twentieth of a second.

ASC+T

All Season Traction/Automatic Stability Control plus Traction helps maintain stable and controlled vehicle response by inhibiting slip at the drive wheels.

The system employs special sensors to monitor wheelspeed and relay the data to the system's electronic control unit, which uses this information to calculate slip rates at the individual wheels. Depending on the driving situation, two forms of remedial action can then be taken by the system: it reacts to slippage caused by large amounts of excess torque by instructing the engine management system to reduce power output. As a supplementary measure, the system will also respond to an especially pronounced tendency toward traction loss at either of the drive wheels with automatic individual application of the affected wheel's brakes. This achieves a locking action comparable with a controlled limited-slip differential. This brake action is active up to 25 mph (40 km/h). From 25 mph (40 km/h) upward, a diminished brake action improves the traction up to 60 mph (100 km/h).

Radio reception

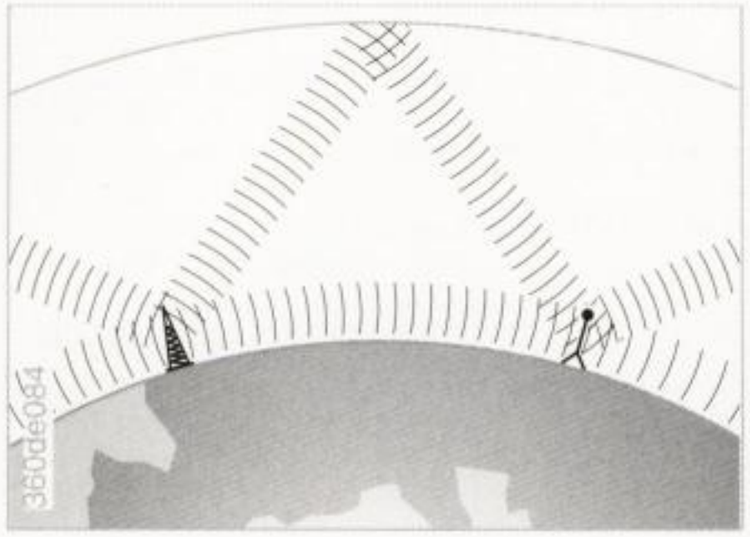

The wave bands MW, LW and KW provide long reception ranges because the signals, propagated at ground level as surface waves, also move as atmospheric waves - reflected from the ionosphere.
Frequency-modulation (FM) provides substantially better sound quality than AM. However, because FM transmissions rely on line-of-sight broadcast waves, their effective reception range is limited.

Although numerous factors combine to impose inherent limitations on the reception quality available from mobile radios, specially designed systems can be employed to minimize their effects:

The Antenna Diversity system employs several FM antennas integrated within the rear window to provide three separate sources for receiving broadcast waves. An integral processor automatically selects the antenna with the best FM reception quality at any given time. Because the ongoing antenna selection process is completed within milliseconds, it remains inaudible to the radio listener.

Safety belt tensioner

The safety belt tensioner responds to collisions by tightening the belts to ensure that occupants remain firmly positioned in their seats. A gas-pressure system retracts the buckle assembly to tension the shoulder and lap belts within fractions of a second, preventing the driver and passenger from slipping forward.

BMW AG

Engine specifications 138
Dimensions and weights 139
Capacities 140
Electrical system 141
Drive belts 141

Engine specifications

Displacement	cu.in (cm³)	192.3 (3,152)
Number of cylinders		6
Maximum output	hp	240
	kW	179
at engine speed	rpm	6,000
Maximum torque	lb-ft (Nm)	236 (320)
at engine speed	rpm	3,800
Compression ratio	ε	10.5
Stroke	in (mm)	3.53 (89.6)
Bore	in (mm)	3.40 (86.4)
Fuel-injection system		Digital-electronic engine-management system

BMW AG

Dimensions and weights

		M3 Sedan		M3 Coupe	
Length	in (mm)	174.5	(4,433)	174.5	(4,433)
Width	in (mm)	66.9	(1,698)	67.3	(1,710)
Height (unloaded)	in (mm)	53.7	(1,365)	52.6	(1,335)
Wheelbase	in (mm)	106.7	(2,710)	106.7	(2,710)
Track, front	in (mm)	56.0	(1,422)	56.0	(1,422)
Track, rear	in (mm)	56.6	(1,438)	56.6	(1,438)
Minimum turning radius ∅	ft (m)	38.1	(11.6)	38.1	(11.6)
Vehicle weight, empty (incl. driver, ready for operation, with full tank of fuel, options not included)					
with manual transmission	lbs (kg)	3,175	(1,440)	3,175	(1,440)
with automatic transmission	lbs (kg)	3,241	(1,470)	–	
Approved gross vehicle weight					
with manual transmission	lbs (kg)	4,255	(1,930)	4,255	(1,930)
with automatic transmission	lbs (kg)	4,321	(1,960)	–	
Approved front axle weight	lbs (kg)	2,006	(910)	2,006	(910)
Approved rear axle weight	lbs (kg)	2,469	(1,120)	2,469	(1,120)
Maximum payload	lbs (kg)	1,080	(490)	1,080	(490)
Approved roof load capacity	lbs (kg)	165	(75)	165	(75)
Never exceed either the approved axle weights or the gross vehicle weight.					
Luggage compartment capacity	cu.ft (l)	15.4	(435)	14.3	(405)

Capacities

	Quarts (Liter)	Notes
Fuel tank	approx. 16.4 (62)	Fuel specification: Page 21
Windshield washer system with headlamp washer system	approx. 2.6 (2.5) approx. 5.3 (5.0)	For details: Page 102
Cooling system including heater circuit	11.4 (10.75)	For details: Page 105
Engine oil and filter change	6.3 (6.0)	Approved HD oil Specifications: Page 103
Manual transmission, automatic transmission, differential	–	Lifetime fluid, no fluid change required.

BMW AG

Electrical system

Battery	12 V, 75 Ah
Spark plugs	FGR 8 KQC Bosch

Drive belts

AC generator - Water pump - Power steering	6 PK x 1555
Compressor for the air conditioning air-pump	5 PK x 890

BMW AG

BMW AG

Everything from A to Z 144

Owner service procedures from A to Z 148

A

ABS (Antilock Brake System) 87
Activated charcoal filter 76
Adjusting steering wheel 35
Air conditioner 75
Air distribution 74
Air pressure 22, 94
Air supply 76
Airbag 40
Aluminum wheel 98
Antifreeze, radiator 90, 105
Antilock Brake System (ABS) 87
Aquaplaning 85, 94
ASC+T (Automatic Stability Control plus Traction) 68
Ashtray 78
AUC (Automatic recirculated-air control) 75
Automatic climate control 72
Automatic recirculated-air control (AUC) 75
Automatic Stability Control plus Traction (ASC+T) 68
Automatic transmission 46
Average fuel consumption 63
Average speed 62

B

Backrest unlock 35
Backup lamps 45, 121
Battery 127, 141
  Removal and installation 128
  Symbols 127
Battery capacity 141
Battery change, key 123
Battery charge current 18
Battery electrolyte 127
Battery, discharged 131
Belts 37
Blower 76
BMW Hi-Fi System 77
Brake fluid 106
Brake lamp, replace lamp 121
Brake pads 18
Brake system hydraulic circuits 19
Brakes 88
  Defects 89, 106
Braking system 89
Breaking-in vehicle 84
Bulb replacement 119

C

Car battery 127
Car radio 92, 135
Car wash 109
CARB OBD II interface 21
Care of upholstery 112
Care of wool velour 112
Care, exterior 110
Care, interior 111
Catalytic converter 86
Cellular phone 92
Center armrest 79
Center brake lamp 121
Central locking system 27
Central locking system button 28
Changes, technical 5
Charge indicator lamp 18
Charging the battery 128
Check air pressure 22
Check Control 55
Check Control with outside temperature gauge and digital clock 58
Check engine oil level 102
Childproof door locks 42
Child restraint system 38
Cigarette lighter 78
Clock 53
Cockpit 14
Coinbox 78
Computer 61
Consumption indicator 51
Convenient closure 27
Coolant 90, 105
Cooling system 140
Cruise control 50
Cruising range 63
Cup holder 78

D

Dashboard 14
Dashboard lighting 69
Data,
  engine 138
  dimensions 139
  technical 138
Date 56, 58
Daytime lamps switch 69
Deep water 85
Defrost, windshields 75
Digital clock 53
Dimensions 139
Dipstick, engine oil 102
Directional signal 48
Dirt on the paintwork 110
Disc brakes 88
Disconnect the battery 128
Display lighting 69
Distance, remaining 63
Door keys 26
Door locks 27
Doors, emergency actuation 27
Drive belts 141
Driver's airbag 40
Driving hints 84
Driving in winter 90

E
Electric window actuator 31
Electrical seat
adjustment 34
Electrical system 141
Electrolyte 127
Electronic unit,
vehicle immobilization 26
Elements of operation 14
Emergency operation,
central locking system 27
luggage compartment
lid 29
sliding/tilt sunroof 130
Energy control 51
Engine compartment 100
Engine data 138
Engine oil 102
Filling capacity 140
Engine oil additives 103
Engine oil consumption 102
Engine oil pressure 18
Engine oil types 103
Eyelets, tow starting and
towing 132

F
Failure messages 55
Failure of an electrical
device 129
Fault displays 55
Filling capacities 140
Final drive
Filling capacity 140
First aid kit 20
Flashlight 77
Flat tire 94, 124
Flower pollen 76
Foglamps 70
Foglamps, replace bulb 120
Folding rear backrest 79
Footbrake 88
Footwell lamp,
replace bulb 123
Footwell lamps 70
Front seat, position 33
Frost protection, radiator 90
Fuel 21
preparation 138
Fuel consumption
indicator 52
Fuel filler door 21
Fuel gauge 52
Fuel specification 21
Fuses,
replacing 129

G
Glove compartment 77
Glove compartment lamp,
bulb replacement 123

H
Hand lamp 77
Handbrake 45
Hazard warning system 20
Hazard warning triangle 20
Headlamp cleaning
system 102
Filling capacity 140
Headlamp cover,
care 109, 119
Headlamp flasher 48
Heated seats 71
Height 139
Hi-Fi System 77
High beam 48
High beam headlamps,
replace lamps 119
Hood release 99
Horn 15

I
Identification mark, tires 96
Ignition 42
Ignition key 26
Ignition switch 42
Independent ventilation 65
Indicator lamps 18
Inflation pressure 22, 94
Inside rearview mirror 36
INSPECTION 52
Installing child seats 39
Instrument cluster 16
Instrument cluster switch 48
Instrument lighting 69
Interior lamps 70, 122
Interior lamps,
replace bulbs 122
Intermittent wiper switch 49

J
Jack 124
Jump start 131

K
Keys 26

L
Lamp switch 69
Leather care 113
LED (Light-emitting
diodes) 93
Length 139
License plate lamp,
replace bulb 122
Light switch 69
Light-emitting diode
(LED) 93
Lighter 78
Lights-on warning 69

Limit 64
Limited-slip differential 89
Lock buttons 27
Locks, care 90
Low beam headlamp 69
Low beam headlamps, replace lamps 119
Lug bolts 125
Luggage compartment lamps, replace bulb 123
Luggage compartment lid 29
Luggage straps 30

M

M+S tires 97
Maintenance 52, 108
Make-up mirror 36
Manual transmission 45
Manually controlled recirculated-air 75
Microfilter 76
MID (Multi-information display) 53
Mirror heating 36
Mirrors 36
Multi-disk limited-slip differential 89
Multi-information display (MID) 53

N

Notes on driving 84

O

Odometer 51
Oil additives 103
Oil change interval, refer to the Service booklet 102
Oil consumption 102
Oil dipstick 102
Oil pressure, indicator lamp 18
OILSERVICE 52
Oil types 103
Oil, power steering 106
Onboard computer 61
Outside rearview mirror 36
Outside temperature 62

P

Paintwork, care 110
Paintwork, minor repairs 111
Paintwork, waxing 111
Parking brake 45
Parking lamps 69
Parking lamp, replace bulb 119
Parking in winter 91
Passenger airbag 40
Placing the vehicle out of use 115
Power door locks 27
Power steering, oil 106
Pressure, tire 22, 94

R

Radiator 140
Radio 92, 135
Reading lamps 70
Rear backrest, folding 79
Rear foglamp 70
Reclining seat 33
Refueling 21
Remote control, onboard computer 67
Replacement keys 26
Reserve indicator lamp 52
Reverse 45
Rims 96, 98
Roof rack 91
Rubber seals and components 90

S

Safety belts 37
SAFETY DEFECTS 6
Seat belts 37
Seat heaters 71
Seat, electric 34
Seat, mechanical 33
Seatback release 35
Seats, adjustment 33
Selector lever, automatic transmission 46
Service Interval Display 52
Side airbag 40
Ski bag 79
Sliding 91
Sliding/tilt sunroof 32
Close in case of electrical fault 130
Slippery roads 90
Snow chains 90, 98
Spare keys 26
Spare tire 95, 124
Spark plugs 141
Special oils 104
Speed warning activation threshold 64
Speedometer 16
Starting assistance 131
Starting problems 86
Starting the engine 43
Steering 106
Steering wheel lock 42
Stopwatch 64
Storage shelves 77
Summer tires 96
Sun visor 36
Switching off the engine 44
Symbols 4
Battery 127

T

Tachometer 16, 51
Taillamps,
replace lamps 121
Technical data 138
Telephone 92
Temperature 75
Temperature layering 76
Third brake lamp 121
Through-loading system 79
Timer 65
Tire,
change 124
damages 94
inflation pressure 94
inscription 96
replacement 95
sizes 98
tread 94
Tool kit 118
Towing 132
Tow fittings 132
Track 139
Transmission 45
Traveling abroad 86
Tread depth, tires 94
Trip distance recorder 51
Turn signal 48
Turn signal,
replace bulb 120
Turning radius 139

U

Unlocking and locking doors 27
Used batteries 128

V

Vehicle care, interior 111
Vehicle identification number 107
Vehicle immobilization unit 26
Vehicle paintwork 110
Ventilate at a standstill 65
Ventilation, draft free 76

W

Warning lamps 18
Warning "Light-On" 69
Warnings 55
Wash vehicle 109
Washer fluid,
add 102, 140
Water on the roads 85
Waxing, paintwork 111
Weights 139
Wheel lug wrench 124
Wheel rotation on the axles 95
Wheelbase 139
Wheels and tires 96, 98
Wheelslip control,
refer to ASC+T 68
Width 139
Window,
convenient closure 27
Window actuator,
safety switch 31
Window actuator,
electric 31
Window mist, remove 75
Windshield cleaning,
automatic program 49
Windshield washer fluid 102, 140
Windshield washer nozzle adjustment 102
Windshield wiper blade replacement 118
Windshield wipers 49
Winter driving 90
Winter tires 96
Wiper/washer system 49
Work in the engine compartment 99

A
Add coolant 105
Adding oil 103
Adjusting washer nozzles 102
Antifreeze, use 105

B
Backup lamp, replace bulb 121
Battery, charging 128
Battery change, master key 123
Battery, add distilled water 127
Battery, discharged 131
Brake fluid, top up 106
Brake lamps, replace bulb 121
Brakes, defects 89, 106

C
Check air pressure 22
Check Control 55
Check engine oil level 102
Coolant, add 105

D
Defrost windshields 75
Difficult steering 107
Doors, emergency operation 27

E
Emergency actuation, sliding/tilt sunroof 130
fuel filler door 130
Emergency operation, doors 27
luggage compartment lid 29
Engine oil grades 103
External starts 131
Eyelets, tow-starting and towing 132

F
Failure messages 55
Failure of an electrical device 129, 130
Fault displays 55
First aid kit 20
Flat tire 124
Foglamps, replace bulb 120
Footwell lamp, replace bulb 123

G
Glove compartment lamp, replace bulb 123

H
Hazard warning system 20
Hazard warning triangle 20
Headlamp cover, care 109
Headlamp washer fluid, top up 102
Help in case of a breakdown 131
High beam headlamps, replace lamps 119

I
Indicator lamps 18
Inflation pressure 22
Interior lamps, replace bulbs 122

K
Key, battery change 123

L
License plate lamp, replace bulb 122
Low beam headlamps, replace lamps 119
Luggage compartment lamps, replace bulb 123
Luggage compartment lid, emergency operation 29

M
Maintenance 52

O
Oil grades 103
Oil, power steering, top up 106
Onboard tool kit 118

P
Parking lamp, replace bulb 119
Power steering, top up oil 106
Pressure, tires 22
Protective cover, care 109

R
Rear foglamps, replace bulb 120
Remove mist, windshield 75
Replace lamp bulbs 119
Replacing fuses 129

S

Sliding/tilt sunroof, close in case of electrical fault 130
Starting difficulties 131
Starting problems 86
Starting with a discharged battery 131

T

Taillamp 121
Taillamps, replace bulb 121
Tire change 124
Tire damage 94
Tools 118
Top up the windshield washer fluid reservoir 102
Towing 132
Tow fittings 132
Tow-starting 132
Turn signal, replace bulb 120

U

Unlock fuel filler door in the event of electrical fault 130
Unlocking hood 99
Use antifreeze, radiator 105

W

Warning lamps 18
Warnings 55
Washer fluid, top up 102
Window mist, remove 75
Working in engine compartment 99

BMW AG

BMW AG

01 41 9 790 397 US english